FOUNDATION AND GROUND FLOOR PLAN

1/8" = 1'-0"

EL. TOP OF FTG. = 97'-0" TYPICAL UNLESS OTHERWISE NOTED

GENERAL NOTES SHT. S-8

N

MK	FTG. SIZE	FTG. REINF.
③	3'-0" x 3'-0" x 12" DP	4#4 EA. WAY BOT.
④	4'-0" x 4'-0" x 12" DP	6#4 EA. WAY BOT.
⑤	5'-0" x 5'-0" x 12" DP	5#6 EA. WAY BOT.
⑥	6'-0" x 6'-0" x 12" DP	6#6 EA. WAY BOT.
⑥.5	6'-6" x 6'-6" x 14" DP	7#6 EA. WAY BOT.
⑦	7'-0" x 7'-0" x 14" DP	8#6 EA. WAY BOT
⑧	8'-0" x 8'-0" x 16" DP	9#7 EA. WAY BOT
⑫	8'-0" x 12'-0" x 20" DP	11#7 EA. WAY BOT.

CONTINUOUS FOOTING REINF.
2'-0" WD x 12" DP = UNREINFORCED
3'-0" WD x 12" DP = UNREINFORCED
3'-3" WD x 12" DP = UNREINFORCED
4'-0" WD x 12" DP = #4@16 EA. WAY BOT.
5'-0" WD x 12" DP = #5@16 EA. WAY BOT.
5'-6" WD x 12" DP = #5@16" EA. WAY BOT.
7'-0" WD x 16" DP = #5@12" EA. WAY BOT.

REMOVE EXISTING WALLS AND FTG'S AT NEW ELEV. AND STAIR WALLS

EXISTING BOILER BUILDING

BOB D. CAMPBELL & COMPANY
CONSULTING STRUCTURAL ENGINEERS
4838 Baltimore Kansas City, Mo. 64112
Phone 931-4848 Area Code 816

MICHAEL F. QUINLAN LICENSED 5682 KANSAS PROFESSIONAL ENGINEER

DESIGN	MFQ
DRAWN	FAC
DATE	SEPT. 1979
FILE NO.	78-50B
SHEET NO.	S-1

ADDITION TO HIGH SCHOOL
UNIFIED SCHOOL DISTRICT #320
WAMEGO, KANSAS
FOUNDATION AND GROUND FLOOR PLAN

WILSON & COMPANY
SALINA KANSAS

CHANGE ORDER NO. 1 REVISIONS	10-31-79	WJE
REVISION	DATE	BY

WILSON & COMPANY

SALINA KANSAS

ADDITION TO HIGH SCHOOL
UNIFIED SCHOOL DISTRICT #320
WAMEGO, KANSAS

FOUNDATION AND GROUND FLOOR PLAN

DESIGN	MFQ
DRAWN	FAC
DATE	SEPT. 1979
FILE NO.	78-508
SHEET NO.	S-1 R

FOOTING SCHEDULE

MK	FTG. SIZE	FTG. REINF.
3	3'.0" x 3'.0" x 12" DP	4#4 EA. WAY BOT.
4	4'.0" x 4'.0" x 12" DP	6#4 EA. WAY BOT.
5	5'.0" x 5'.0" x 12" DP	5#6 EA. WAY BOT.
6	6'.0" x 6'.0" x 12" DP	6#6 EA. WAY BOT.
6.8	6'.0" x 6'.6" x 14" DP	7#6 EA. WAY BOT.
7	7'.0" x 7'.0" x 14" DP	8#6 EA. WAY BOT.
8	8'.0" x 8'.0" x 16" DP	9#7 EA. WAY BOT.
12	8'.0" x 12'.0" x 20" DP	11#7 EA. WAY BOT.

CONTINUOUS FOOTING REINF.
2'.0" WD x 12" DP = UNREINFORCED
3'.0" WD x 12" DP = UNREINFORCED
3'.3" WD x 12" DP = UNREINFORCED
4'.0" WD x 12" DP = #4@16 EA. WAY BOT.
5'.0" WD x 12" DP = #5@16 EA. WAY BOT.
5'.6" WD x 12" DP = #5@16 EA. WAY BOT.
7'.0" WD x 16" DP = #5@12" EA. WAY BOT.

* DENOTES REVISED DIMENSIONS PER CHANGE ORDER NO. 1

FOUNDATION AND GROUND FLOOR PLAN
1/8" = 1'.0"
EL. TOP OF FOOTINGS = 97'.0" TYPICAL UNLESS OTHERWISE NOTED
GENERAL NOTES SHT. S-8

N

MICHAEL F. QUINLAN LICENSED 5632 KANSAS PROFESSIONAL ENGINEER

BOB D. CAMPBELL & COMPANY
CONSULTING STRUCTURAL ENGINEERS
1330 Baltimore, Kansas City, Mo. 64105
Phone 531-4300 Area Code 816

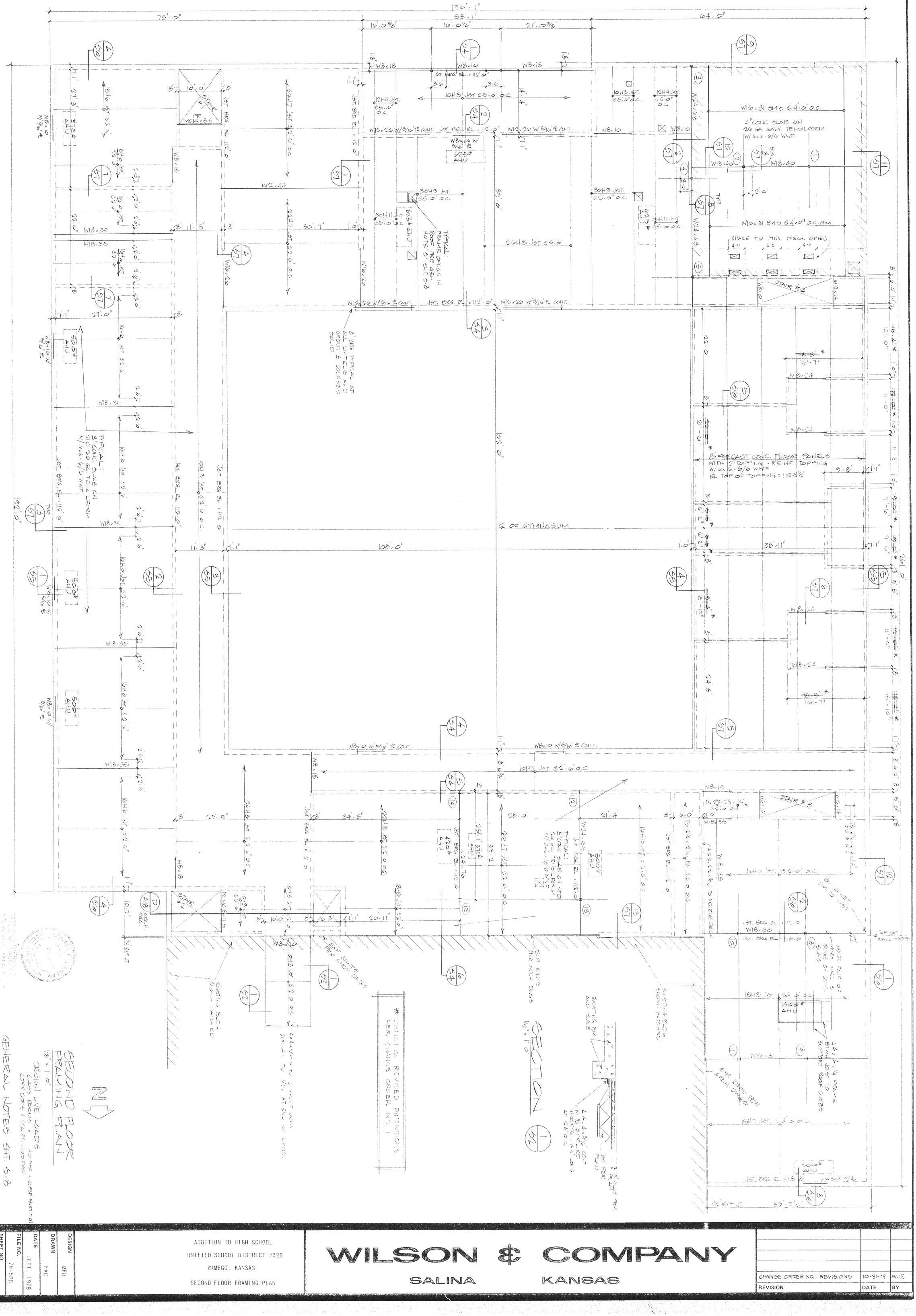

DESIGN	MFG
DRAWN	FAC
DATE	SEPT. 1979
FILE NO.	78-508
SHEET NO.	S-2 R

ADDITION TO HIGH SCHOOL
UNIFIED SCHOOL DISTRICT #320
WAMEGO, KANSAS
SECOND FLOOR FRAMING PLAN

WILSON & COMPANY
SALINA KANSAS

REVISION	DATE	BY
CHANGE ORDER NO.1 REVISIONS	10-31-79	WJE

SECOND FLOOR FRAMING PLAN

1/8" = 1'-0"

Design Live Loads
Class Rooms - 40 PSF + 20 PSF Partition
Corridors & Stairs - 100 PSF

GENERAL NOTES SHT. S.8

N

SECTION

1/2" = 1'-0"

ADDITION TO HIGH SCHOOL
UNIFIED SCHOOL DISTRICT #320
WAMEGO KANSAS
SECOND FLOOR FRAMING PLAN

WILSON & COMPANY
SALINA KANSAS

DESIGN	MFQ
DRAWN	FAC
DATE	SEPT. 1979
FILE NO.	78-508
SHEET NO.	S.2

REVISION	DATE	BY

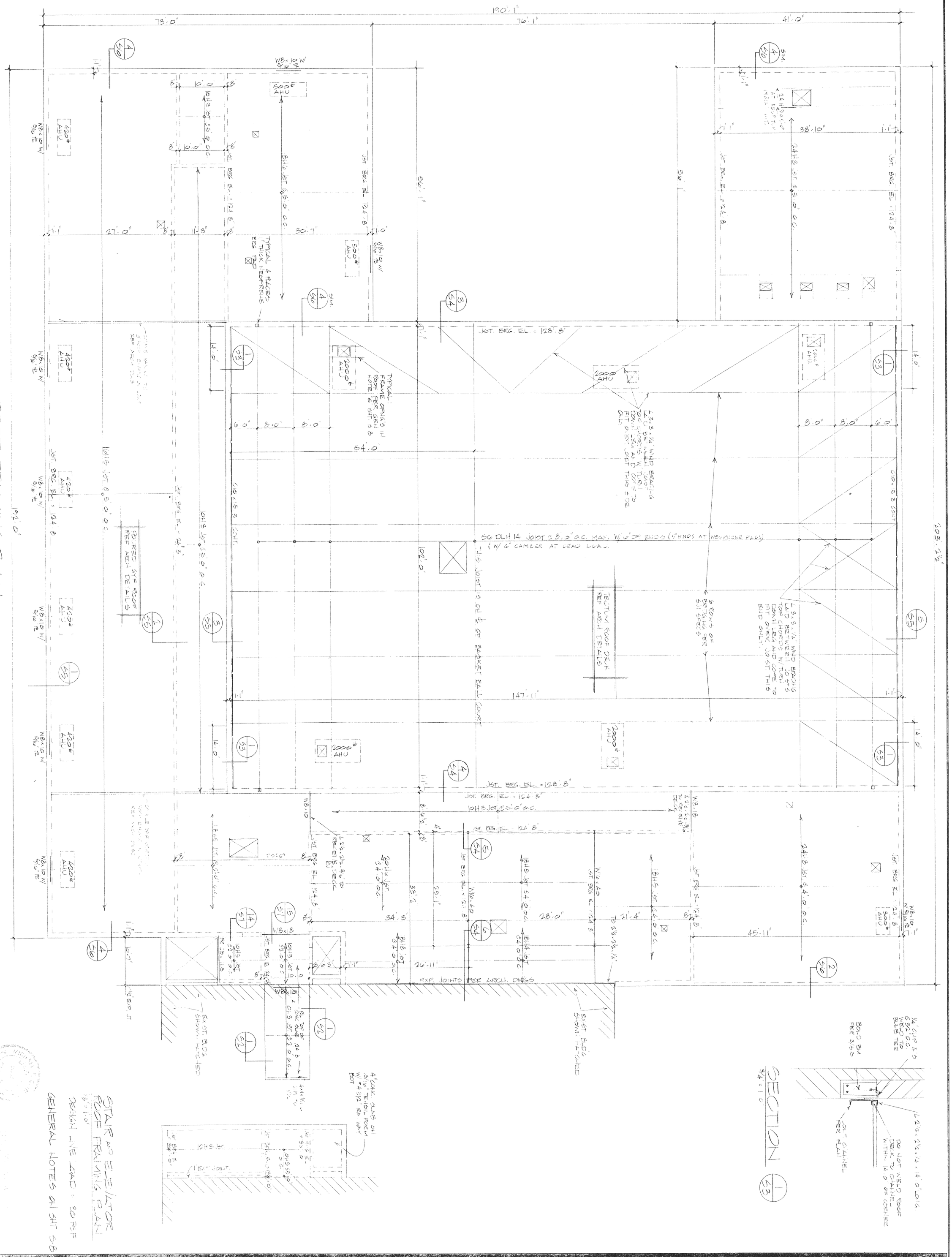

ADDITION TO HIGH SCHOOL
UNIFIED SCHOOL DISTRICT #320
WAMEGO, KANSAS
ROOF FRAMING PLAN

WILSON & COMPANY
SALINA KANSAS

REVISION	DATE	BY

DESIGN MFQ
DRAWN FAC
DATE SEPT 1979
FILE NO. 78-508
SHEET NO. S-3

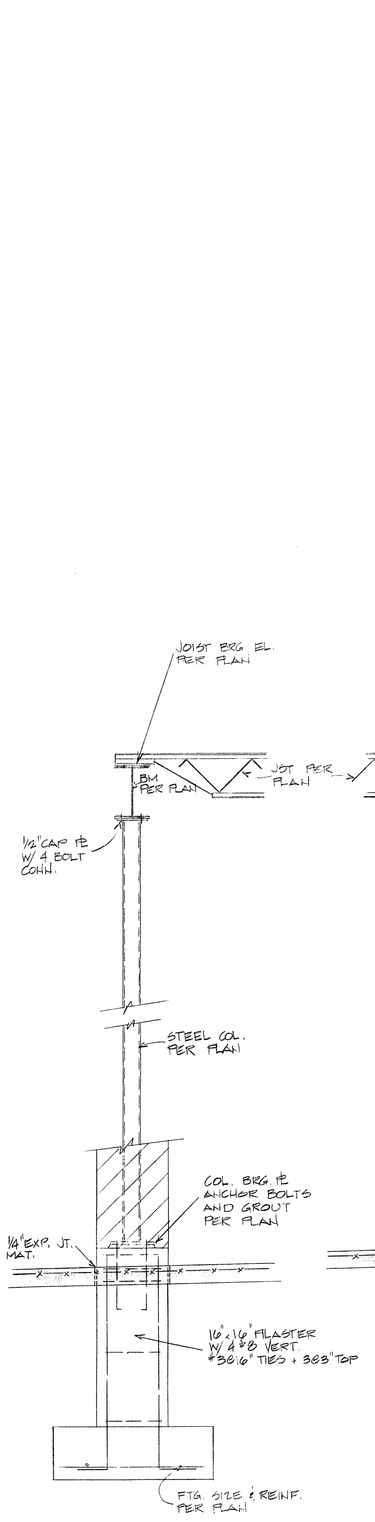

SECTION 1/54
3/4" = 1'-0"

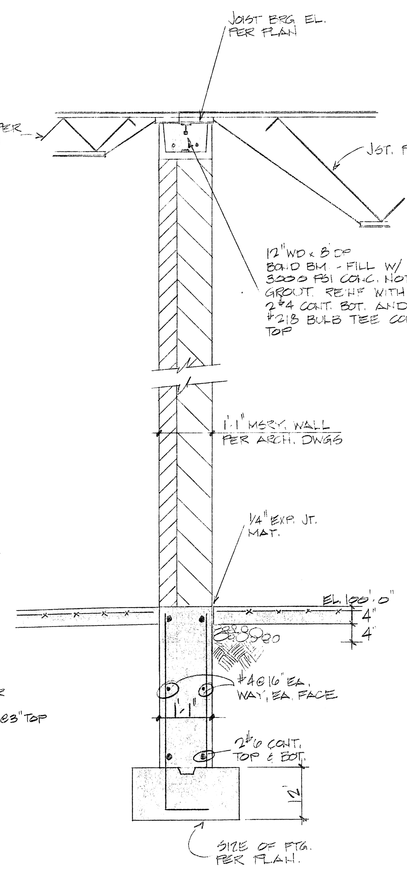

SECTION 2/54
3/4" = 1'-0"

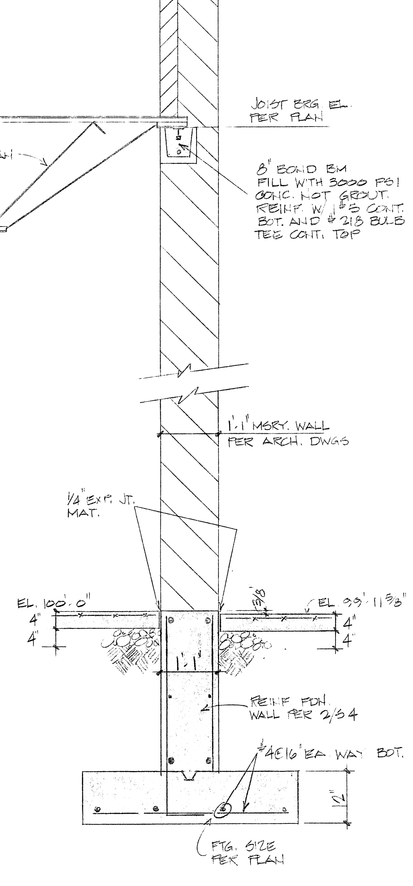

SECTION 3/54
3/4" = 1'-0"

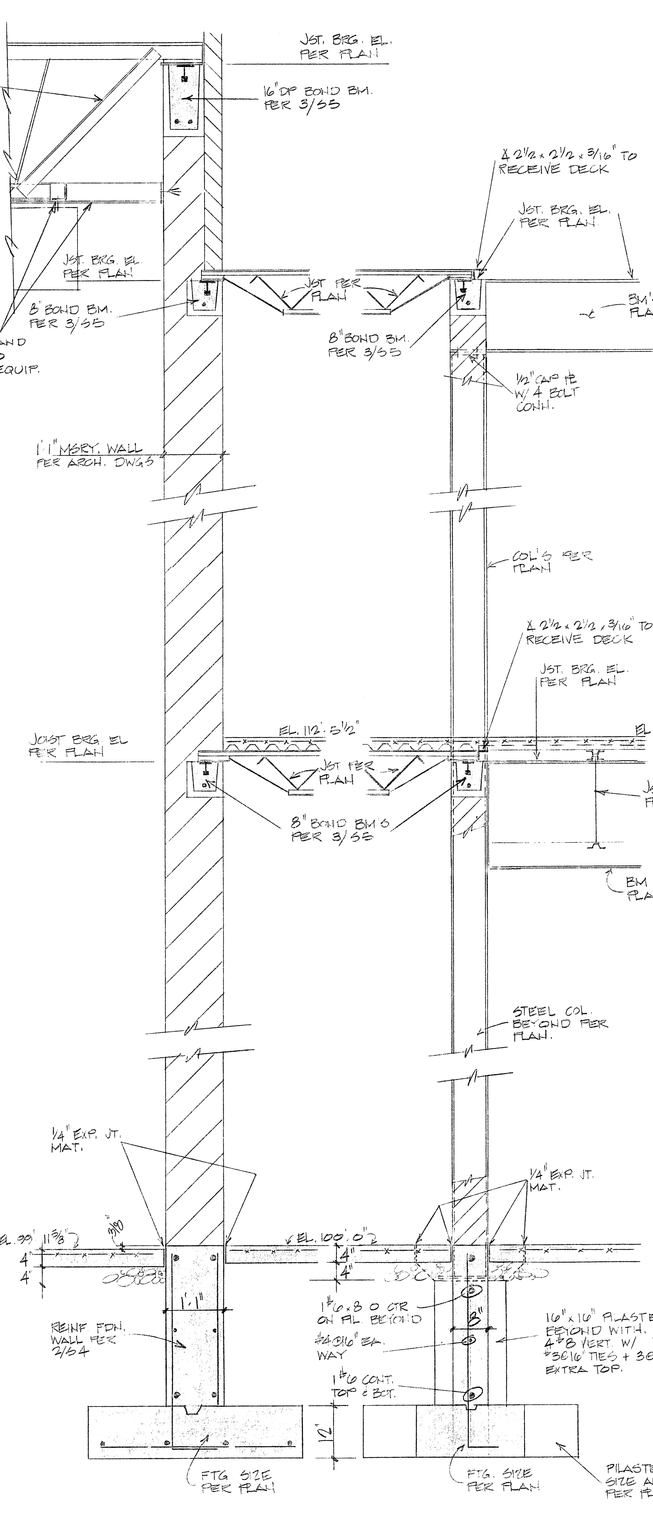

SECTION 4/54
3/4" = 1'-0"

SECTION 5/54
3/4" = 1'-0"

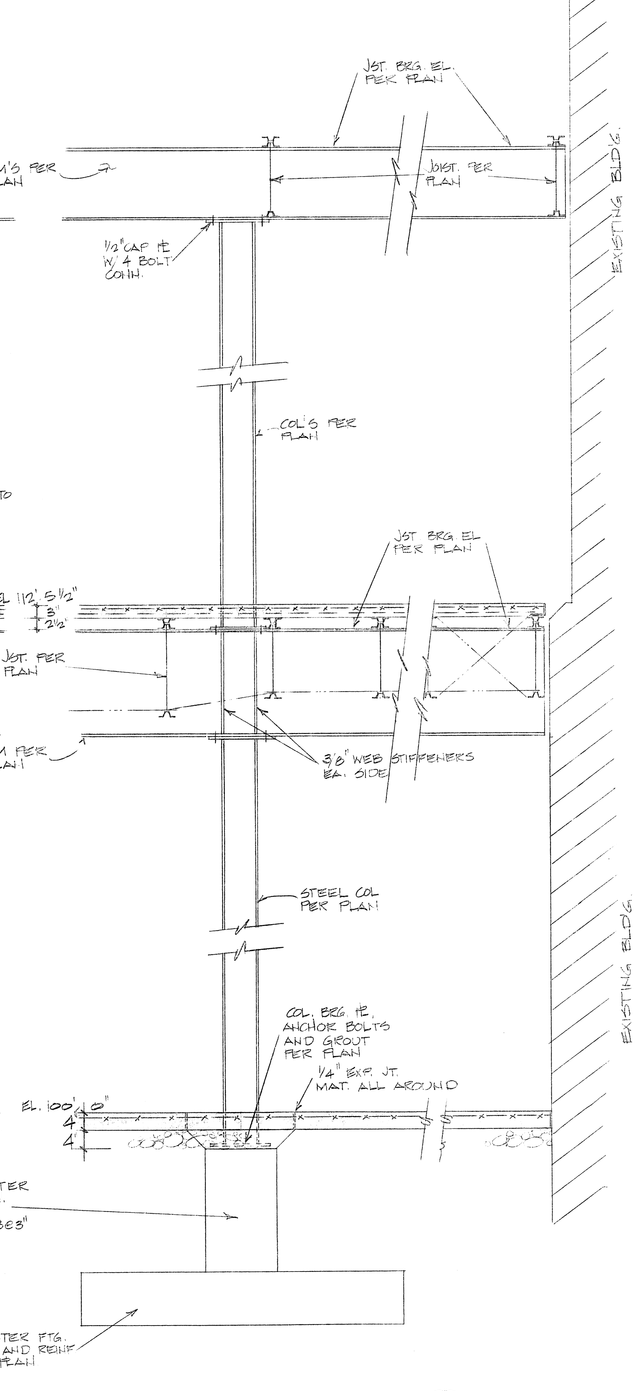

SECTION 6/54
3/4" = 1'-0"

REVISION	DATE	BY

WILSON & COMPANY
SALINA KANSAS

ADDITION TO HIGH SCHOOL
UNIFIED SCHOOL DISTRICT #320
WAMEGO KANSAS
SECTIONS

DESIGN	MFQ
DRAWN	FAC
DATE	SEPT. 1979
FILE NO.	78-508
SHEET NO.	S-4

KYLE L. CAMPBELL & COMPANY
CONSULTING STRUCTURAL ENGINEERS
KANSAS CITY, MISSOURI

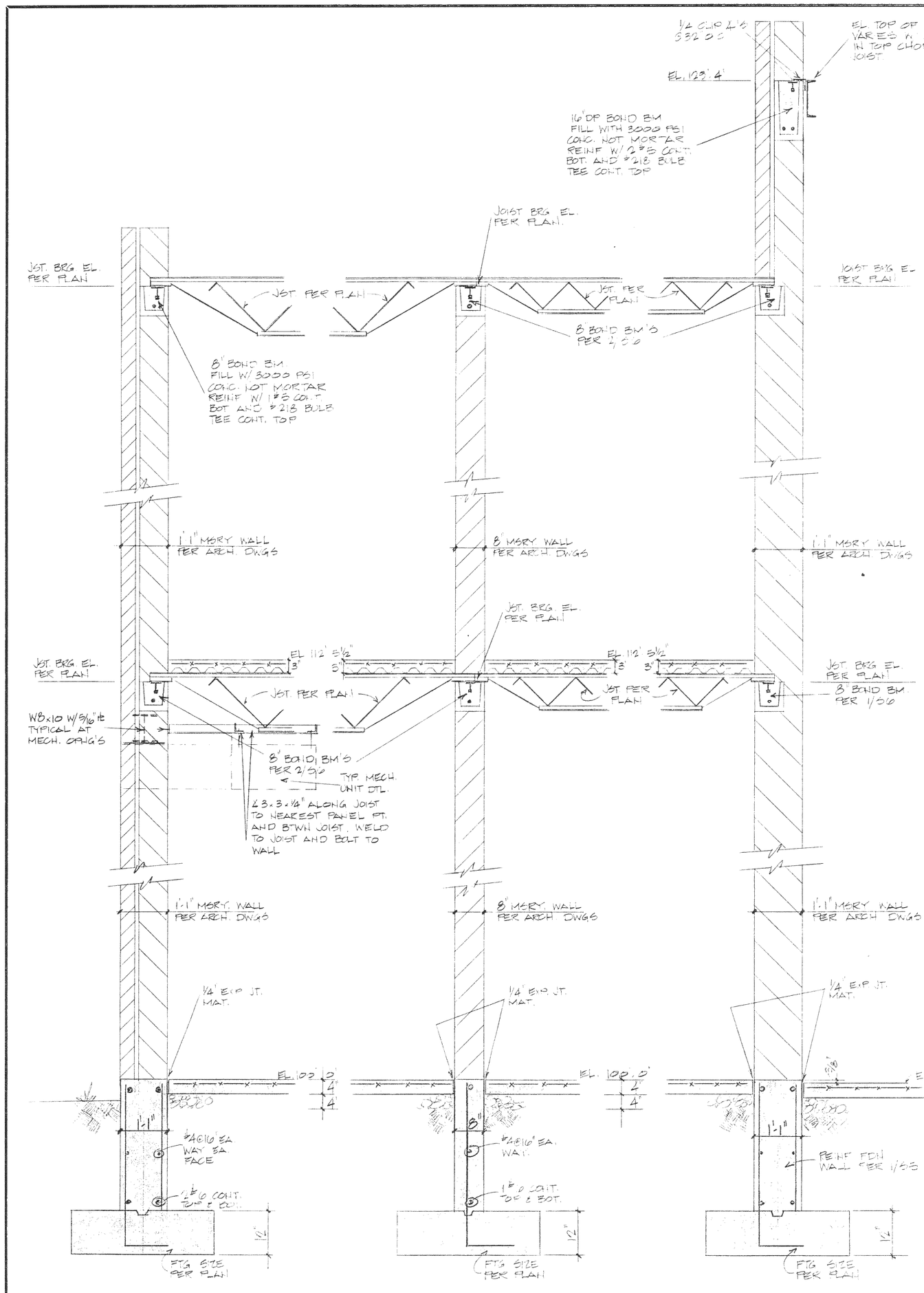

SECTION 1/S5
3/4" = 1'-0"

SECTION 2/S5
3/4" = 1'-0"

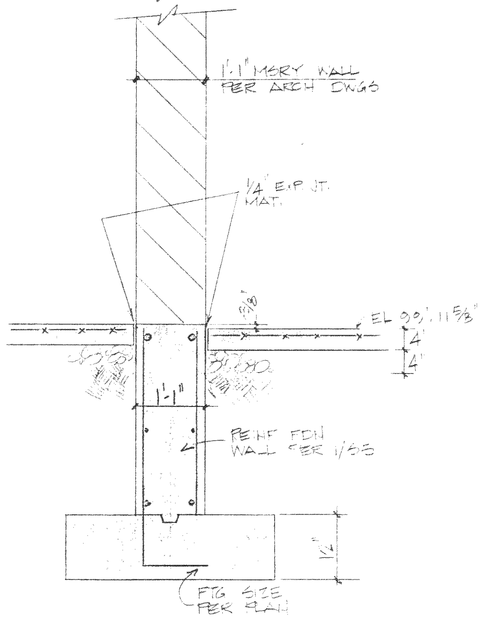

SECTION 3/S5
3/4" = 1'-0"

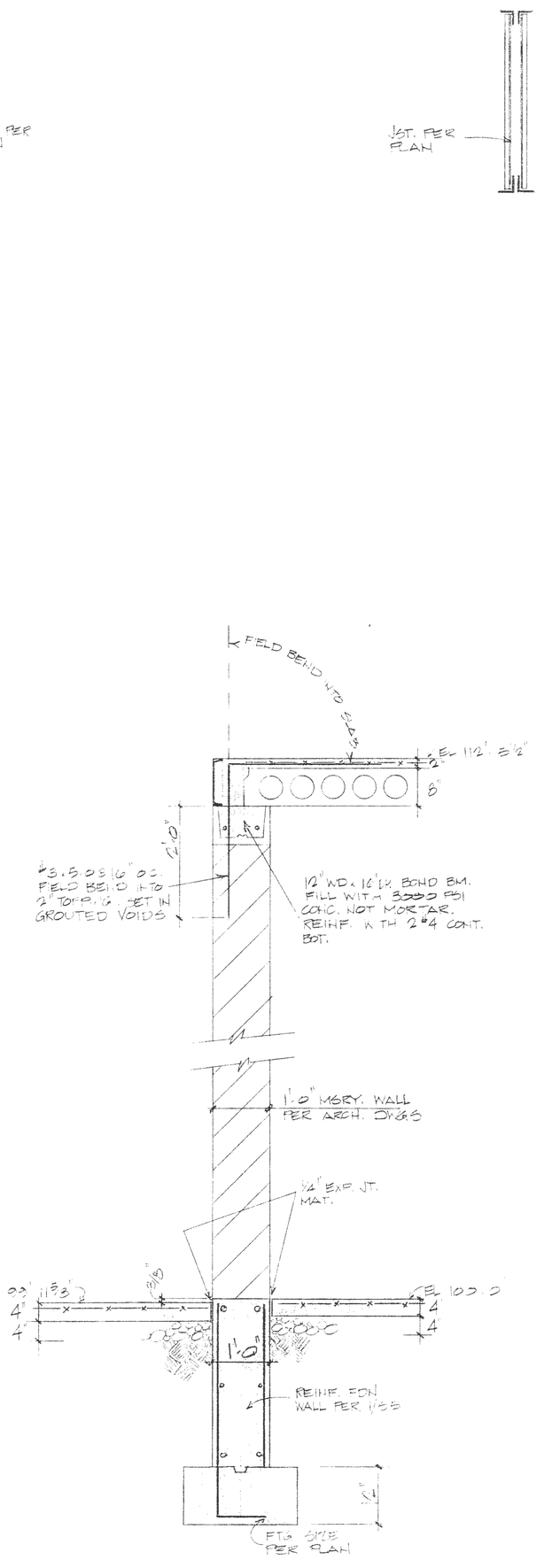

SECTION 4/S5
3/4" = 1'-0"

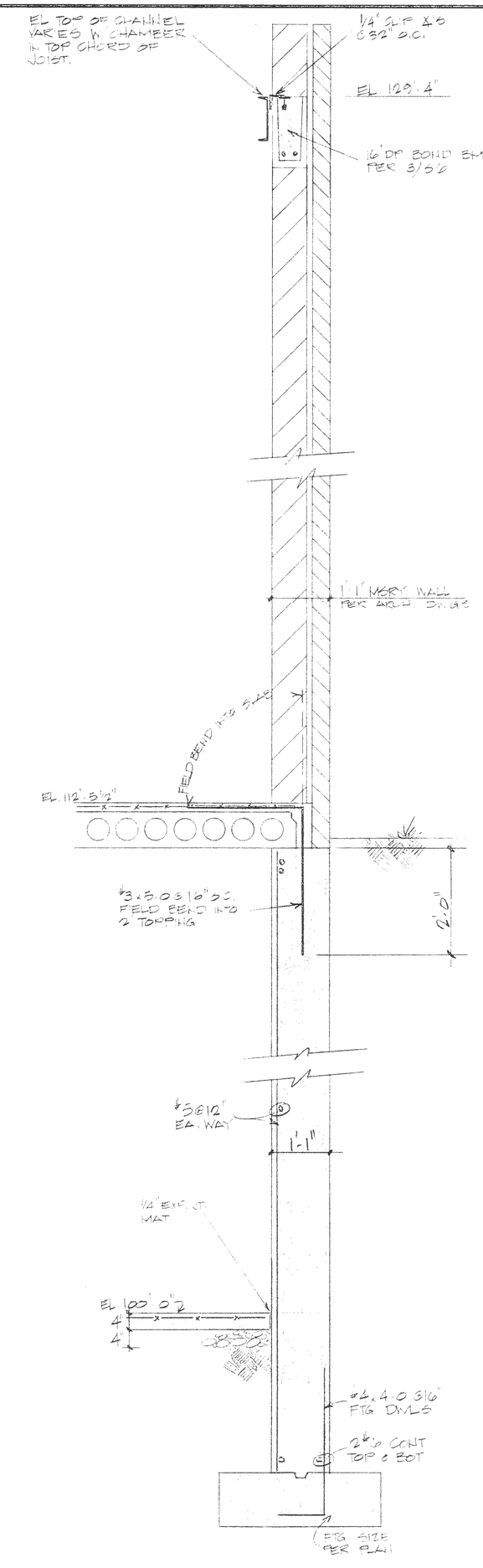

SECTION 5/S5
3/4" = 1'-0"

		BY
		DATE
		REVISION

WILSON & COMPANY
SALINA KANSAS

ADDITION TO HIGH SCHOOL
UNIFIED SCHOOL DISTRICT #320
WAMEGO KANSAS
SECTIONS

DESIGN	MFQ
DRAWN	FAC
DATE	SEPT. 1979
FILE NO.	78-50B
SHEET NO.	S-5

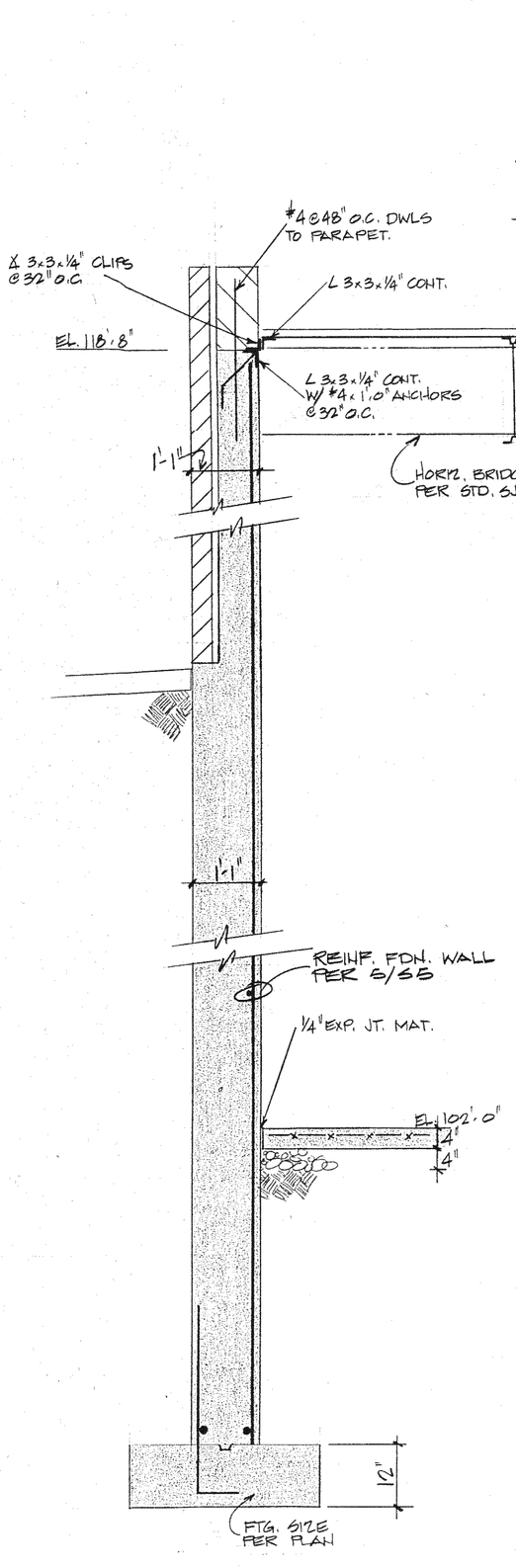

SECTION 1/S6
3/4" = 1'-0"

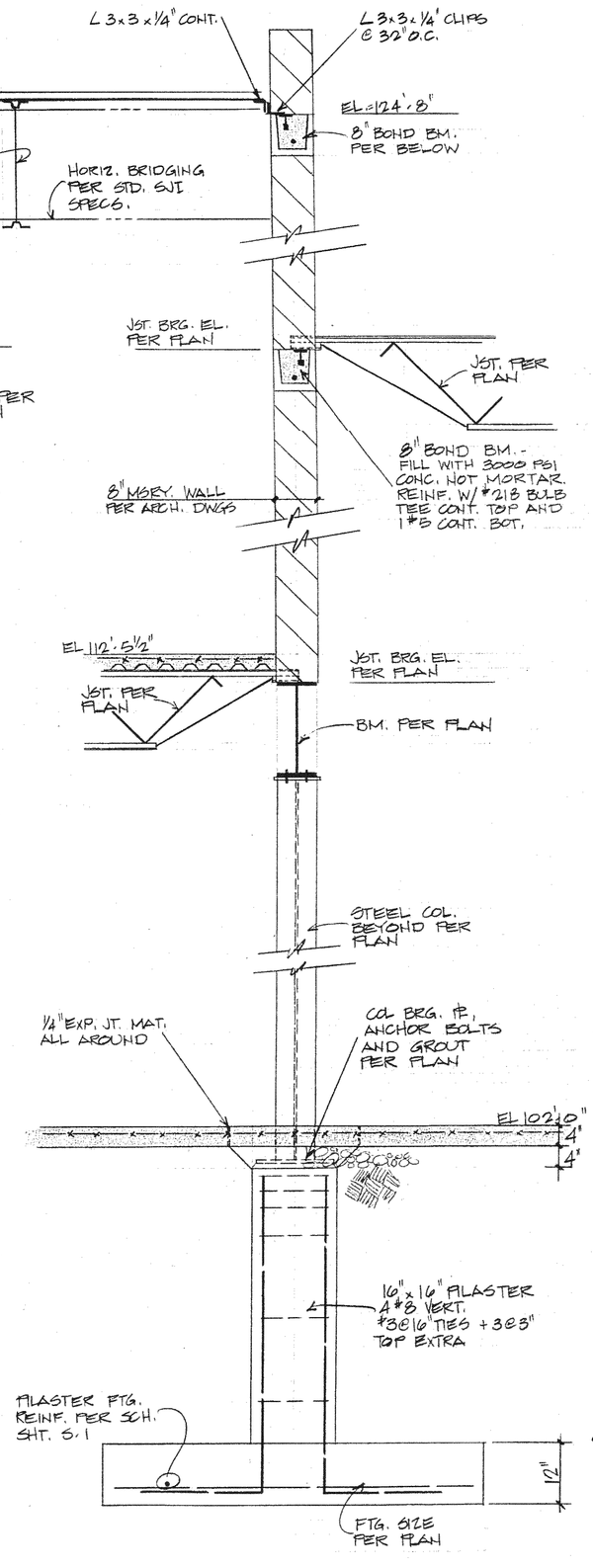

SECTION 2/S6
3/4" = 1'-0"

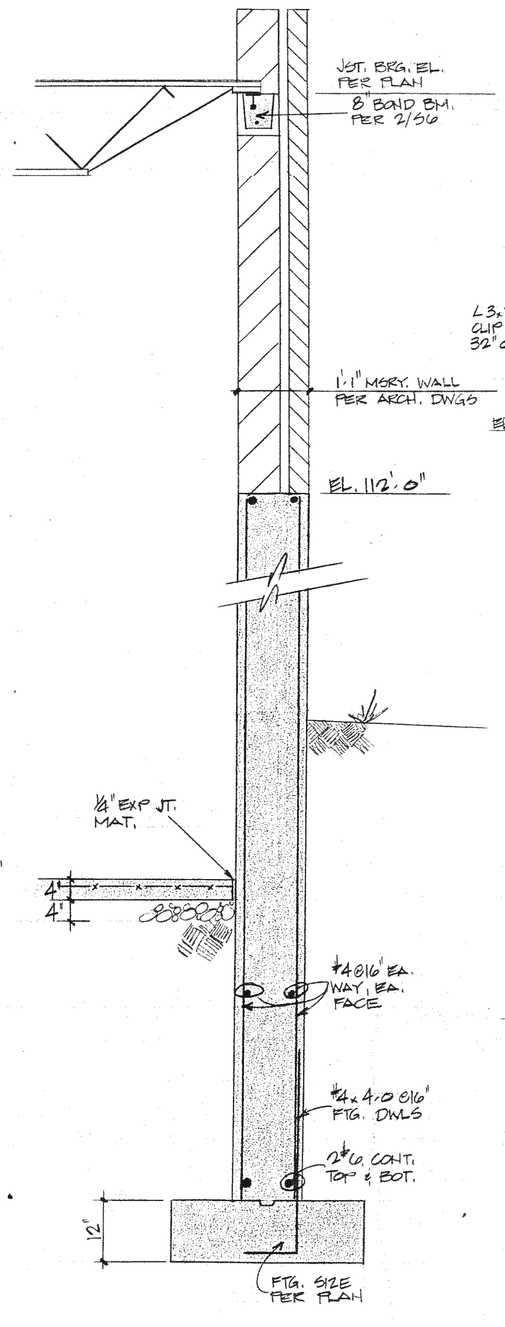

SECTION 3/S6
3/4" = 1'-0"

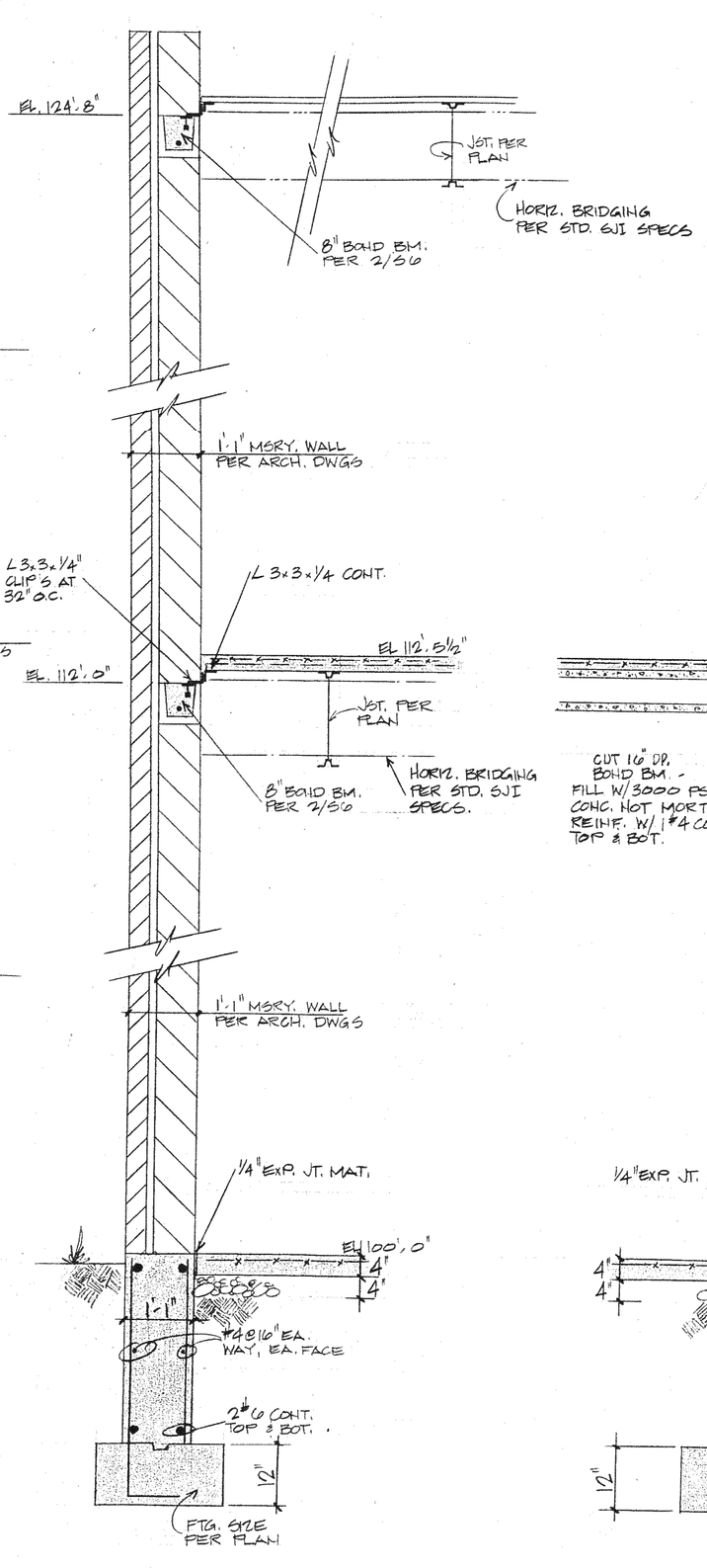

SECTION 4/S6
3/4" = 1'-0"

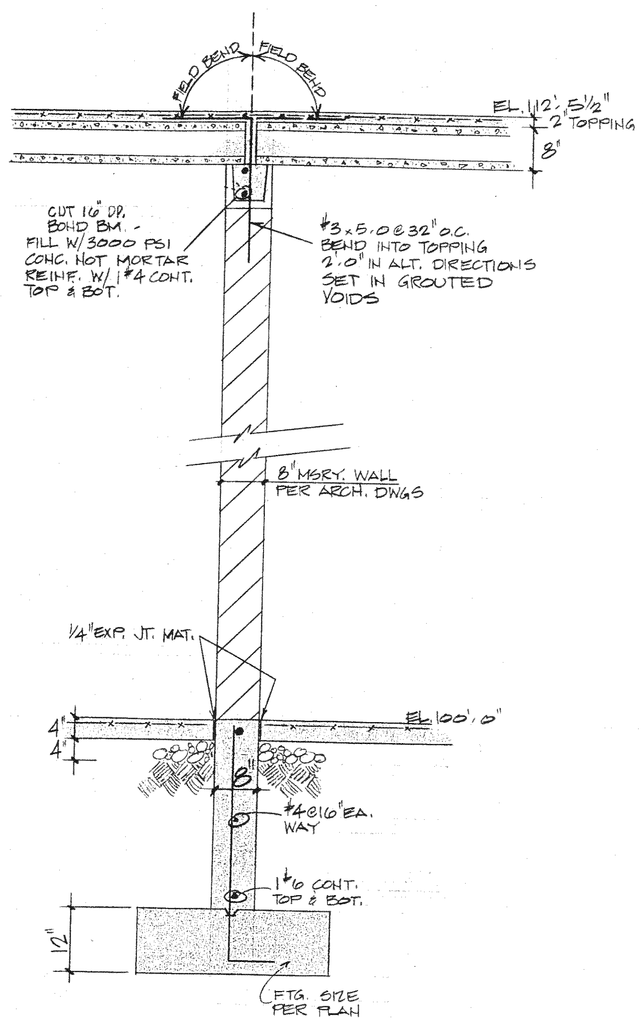

SECTION 5/S6
3/4" = 1'-0"

MICHAEL F. QUINLAN LICENSED 5692 KANSAS PROFESSIONAL ENGINEER

SOB D. CAMPBELL & COMPANY
CONSULTING STRUCTURAL ENGINEERS
4336 Belleview, Kansas City, Mo. 64111
Phone 531-4141 Area Code 816

REVISION	DATE	BY

WILSON & COMPANY
SALINA KANSAS

ADDITION TO HIGH SCHOOL
UNIFIED SCHOOL DISTRICT #320
WAMEGO, KANSAS
SECTIONS

DESIGN	MFQ
DRAWN	FAC
DATE	SEPT. 1979
FILE NO.	78-508
SHEET NO.	S-6

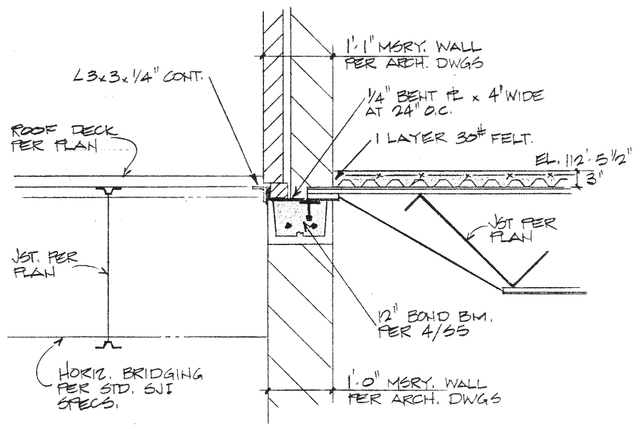

SECTION 1/57
3/4" = 1'-0"

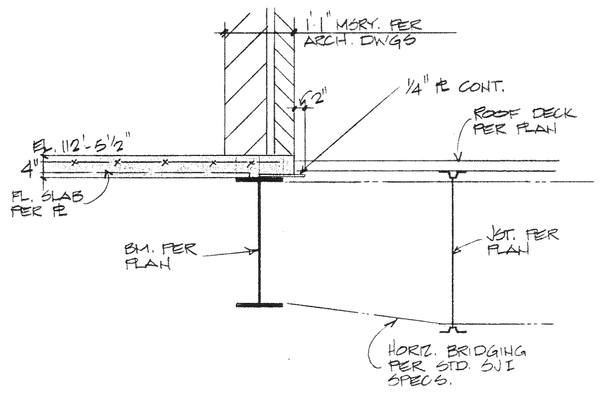

SECTION 2/57
3/4" = 1'-0"

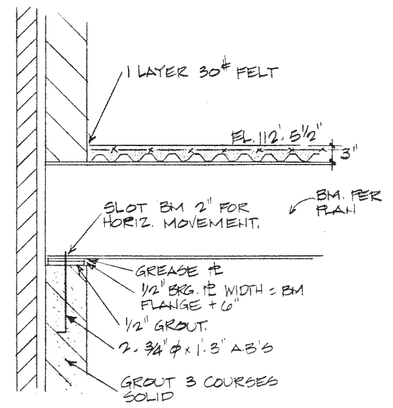

SECTION 3/57
3/4" = 1'-0"

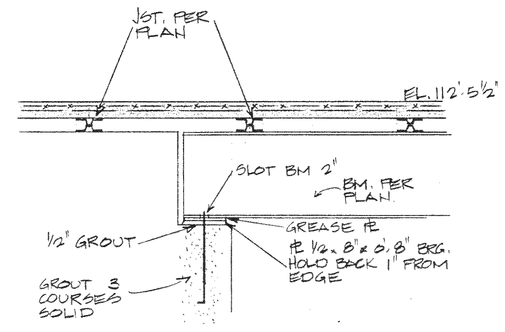

TYPICAL BM. BRG. DETAIL ON 8" MSRY. WALL

SECTION 4/57
3/4" = 1'-0"

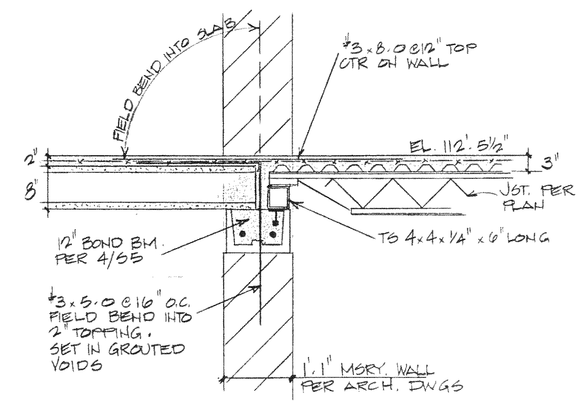

SECTION 5/57
3/4" = 1'-0"

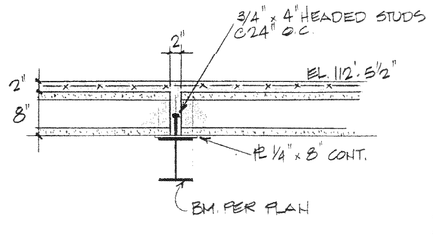

SECTION 6/57
3/4" = 1'-0"

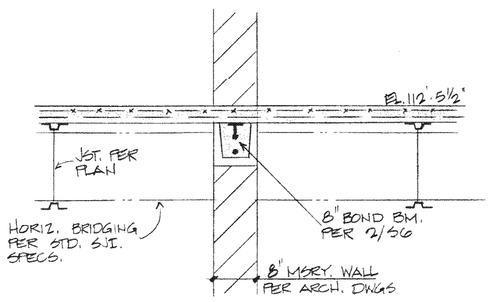

SECTION 7/57
3/4" = 1'-0"

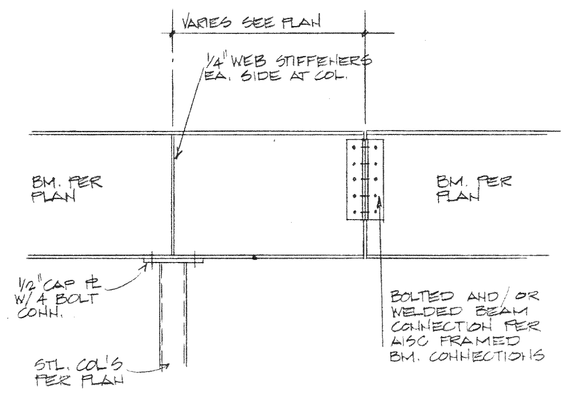

TYPICAL BEAM SPLICE

SECTION 8/57
3/4" = 1'-0"

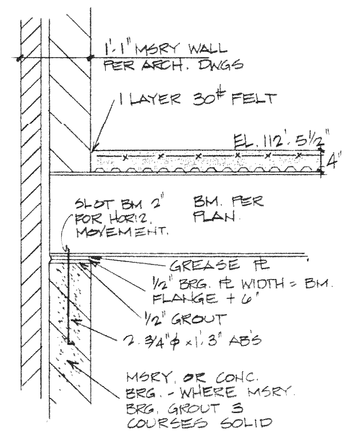

SECTION 9/57
3/4" = 1'-0"

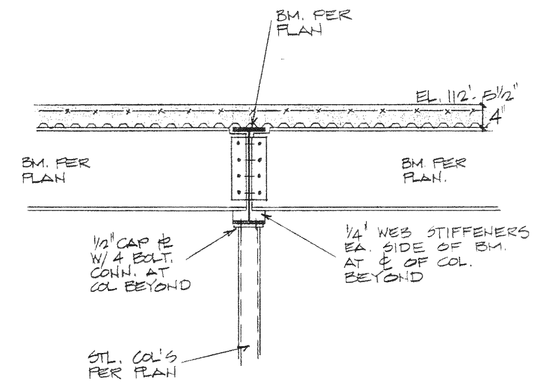

SECTION 10/57
3/4" = 1'-0"

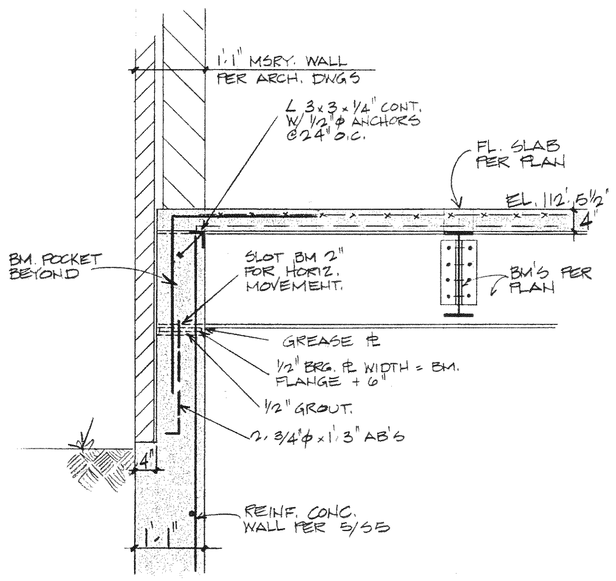

SECTION 11/57
3/4" = 1'-0"

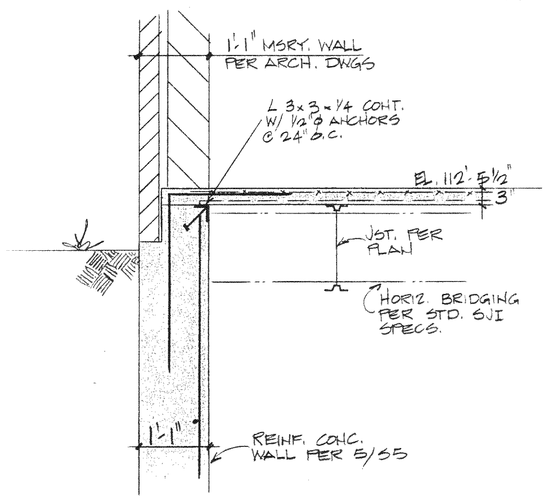

SECTION 12/57
3/4" = 1'-0"

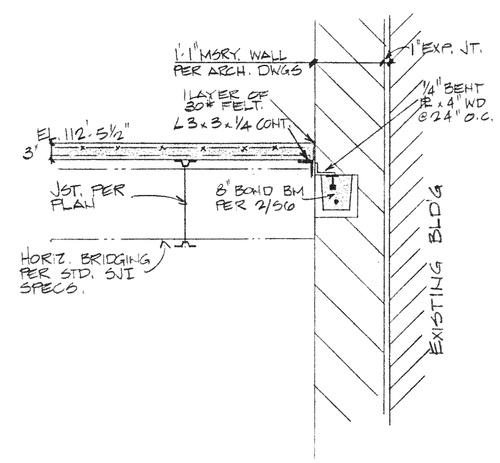

SECTION 13/57
3/4" = 1'-0"

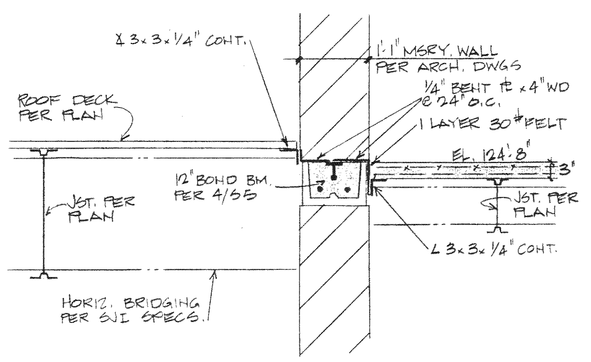

SECTION 14/57
3/4" = 1'-0"

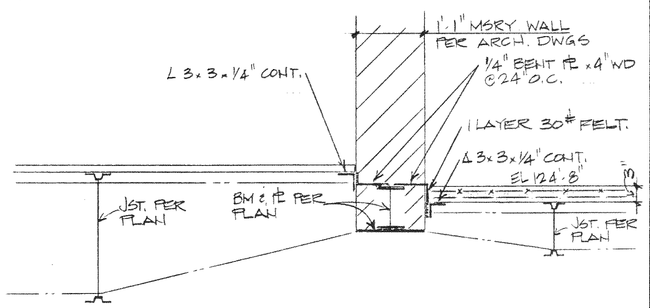

SECTION 15/57
3/4" = 1'-0"

	BY	DATE	REVISION

WILSON & COMPANY
SALINA KANSAS

ADDITION TO HIGH SCHOOL
UNIFIED SCHOOL DISTRICT #320
WAMEGO, KANSAS
MISCELLANEOUS DETAILS

DESIGN	MFQ
DRAWN	FAC
DATE	SEPT. 1979
FILE NO.	78-50B
SHEET NO.	S-7

MICHAEL F. QUINLAN LICENSED 5682 KANSAS PROFESSIONAL ENGINEER

BOB D. CAMPBELL & COMPANY
CONSULTING STRUCTURAL ENGINEERS
4333 Belleview, Kans. City, Mo. 64111
Phone 931-4144 Area Code 816

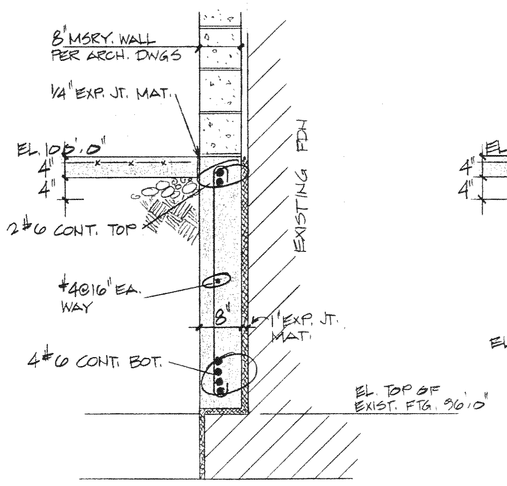

SECTION 1/58
3/4" = 1'-0"

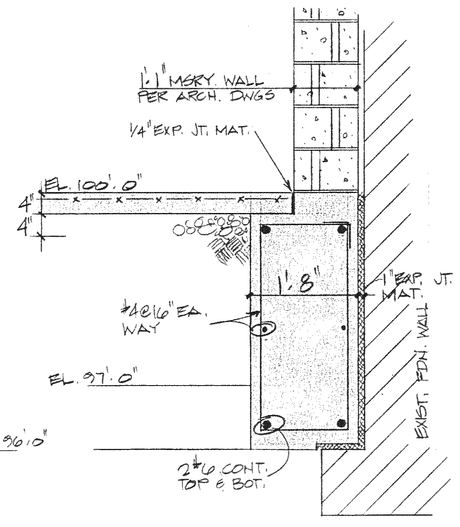

SECTION 2/58
3/4" = 1'-0"

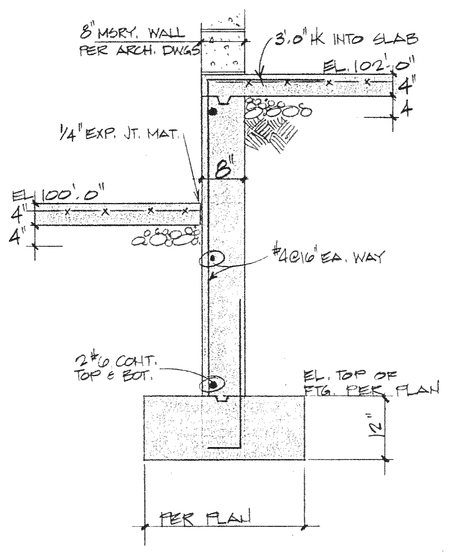

SECTION 3/58
3/4" = 1'-0"

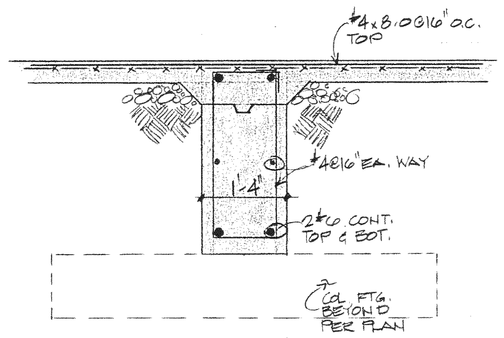

SECTION 4/58
3/4" = 1'-0"

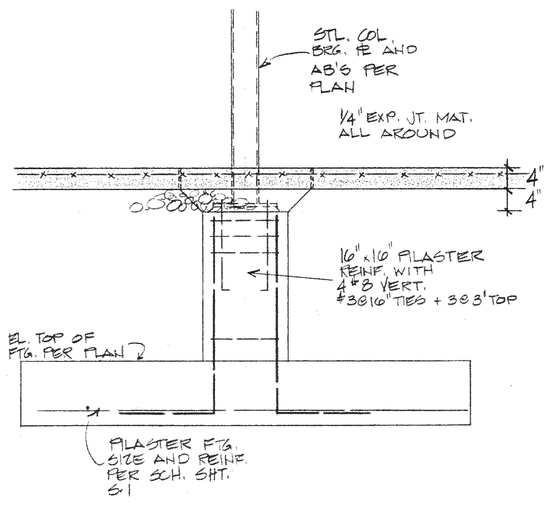

SECTION 5/58
3/4" = 1'-0"

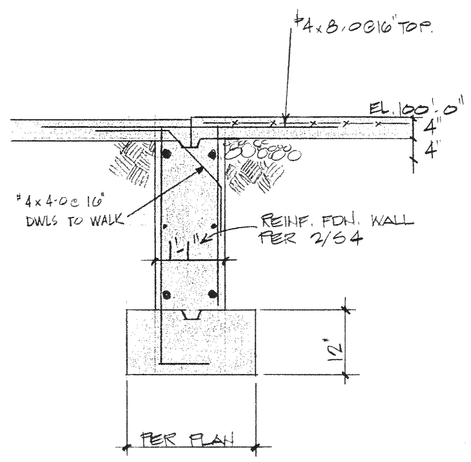

SECTION 6/58
3/4" = 1'-0"

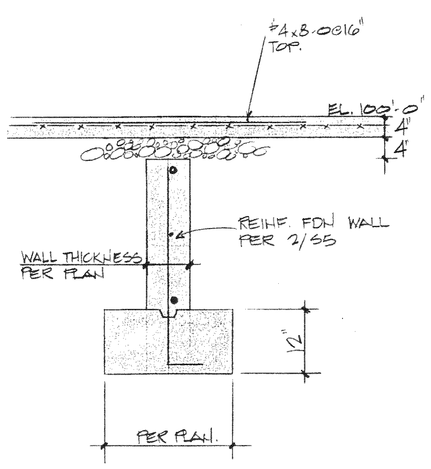

SECTION 7/58
3/4" = 1'-0"

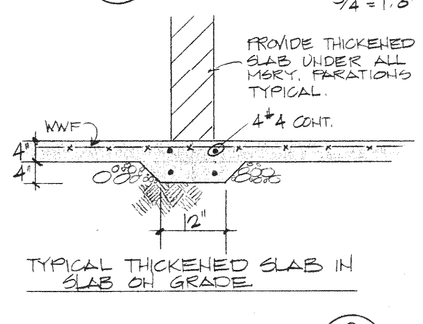

TYPICAL THICKENED SLAB IN SLAB ON GRADE

SECTION 8/58
3/4" = 1'-0"

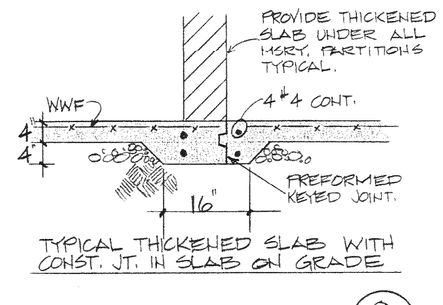

TYPICAL THICKENED SLAB WITH CONST. JT. IN SLAB ON GRADE

SECTION 9/58
3/4" = 1'-0"

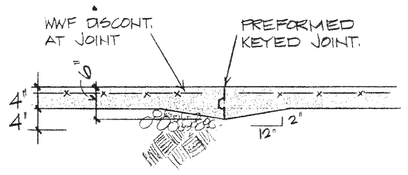

TYPICAL CONST. JT. IN SLAB ON GRADE
NOTED THUS (C.J.) ON PLAN

SECTION 10/58
3/4" = 1'-0"

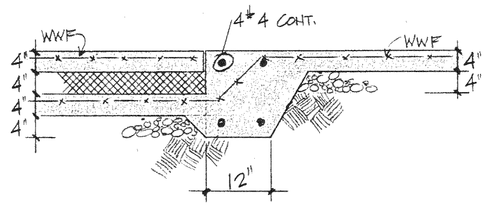

SECTION 11/58
3/4" = 1'-0"

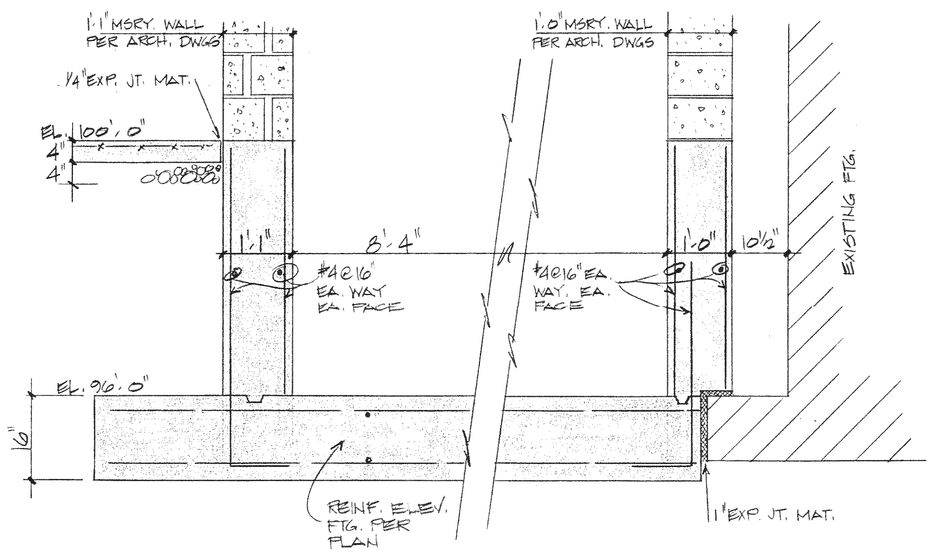

SECTION 12/58
3/4" = 1'-0"

GENERAL NOTES (STRUCTURAL)

A. All concrete shall develop a minimum strength of 3000 psi, in 28 days, but not less than 500 pounds of cement shall be used per cubic yard of concrete regardless of strengths obtained, not over 6 gallons of water per 100 pounds of cement and not over 4 inches of slump.
B. All reinforcing steel shall be A-615, grade 60 steel except stirrups or ties which shall be grade 40 steel.
C. Standard coverage of bars unless otherwise noted shall be:
   Where dirt formed-------3 inches
   Slabs or Joists---------3/4 inch
   Beams or Columns--------1 1/2 inches
   Other-------------------2 inches
   All coverage shall be nominal bar diameter minimum except slabs and joists.
D. Bars marked continuous and all vertical steel shall be lapped 30 diameters at splices and embedments. Unless shown otherwise splice top bars near midspan and splice bottom bars over supports.
E. At corners of all walls and grade beams, supply corner bars 4'-0" long (min. 2'-0" in each direction or 30 bar diameters) in outside face of wall, matching size and spacing of horizontal bars. Where there are no vertical bars in outside face of wall, supply three (3) #4 vertical support bars for corner bars.
F. All concrete is reinforced concrete unless specifically called out as unreinforced. Reinforce all concrete not otherwise shown with same steel as in similar sections or areas.
G. All slabs and stairs not shown otherwise shall be 4" thick with #4 bars @ 12" on center each way. All exterior porches and scoops not otherwise detailed may be constructed in any standard manner, solid or hollow, but must be reinforced with #4 bars @ 12" o.c. each way minimum. Porches shall be dowelled to adjacent walls or grade beams with #4 bars @ 12" o.c. hooked or embedded 30 diameters into both members. Slope porches 1/8" per foot for drainage unless noted otherwise.
H. Construction joints in dirt formed slab to be as shown on plans. Where not shown, limit controlled areas to not more than 1200 square feet or be greater than 40 feet on any side.
I. Accessories shall be as specified in latest edition of Concrete Reinforcing Steel Institute Design Handbook. Maximum accessory spacing shall be 4'-0" o.c. and all accessories to have galvanized feet.
J. All footings are designed to bear on Silty sand capable of safely sustaining 1800 psf.
K. At all holes in concrete walls and slabs, add 2 #5 bars (opening dimension plus 60 diameters long) at each of four sides and add 2 #5 x 5'0" diagonally at each of four corners of hole; in 8" wall openings reinforce similar, but 1 #5 instead of 2 #5 respectively.
L. Allow 1/4 ton of reinforcing bars #4 or larger to be used as directed in the field for special conditions (labor for placing same to be included).
M. Unless otherwise covered on architectural plans or specifications, control joints in masonry construction shall be 3/8" wide, full height of wall. Joints shall be spaced at 30'-0" o.c. for walls up to 15'-0" high and 20'-0" o.c. for walls over 15'-0" high. Coordinate location of joints with architect.
N. Lintels over all openings in walls not otherwise covered, shall be one 5" x 3 1/2" x 5/16" angle for each 4" of masonry. All exterior lintels to be galvanized.
O. All structural steel shall be A36 grade. Fabrication and erection shall be in accordance with the latest edition of AISC Manual of Steel Construction.
P. All beam connections shall be welded or bolted per 1970 American Institute of Steel Construction Handbook, Framed Beam Connections.
Q. Weld all steel joists to beams and angles or bulbtees set in concrete with 1/4" fillet weld, 2" long each side.
R. All H series joists shall have horizontal bar bridging as per Steel Joists Institute Specifications. Provide rigid x-bridging; in addition to and matching horizontal bridging where joists are discontinuous unless horizontal bridging is anchored to wall top and bottom. All DLH Series joists shall have rigid x- briding as per SJI Specifications.
S. All openings in steel joists roof to have 3 x 3 x 1/4" angle frame set between joists. Support mechanical equipment with 4 x 4 x 5/16" angles laid between joists and 4 x 4 x 5/16" angles (length equals mechanical unit dimension + 2'-0" or 4'-0" min.) welded to top or bottom chord of joists to distribute load to joist panel points.
T. See Architectural and Mechanical drawings for embedded items not shown herein and to verify size and location of all openings. Before executing anything herein shown, the Contractor shall examine actual job conditions and report to the Engineer any error, omission, or difficulty affecting the work.
U. No aluminum items shall be embedded in any concrete.
V. These drawings are for this specific building and no other use is authorized
W. Provide a minimum of Span (in) /1440 camber at midspan on all bar joists.
X. Construction joints in beams, slabs and grade beams shall occur at midspan (middle third). Provide 2 x 4 horizontal keys at construction joints.
Y. This building is designed for wind loads required by the Uniform Building Code.

MICHAEL F. QUINLAN LICENSED 5682 KANSAS PROFESSIONAL ENGINEER

BOB D. CAMPBELL & COMPANY
CONSULTING STRUCTURAL ENGINEERS
4328 Belleview, Kansas City, Mo. 64111
Phone 531-4144 Area Code 816

REVISION	DATE	BY

WILSON & COMPANY
SALINA KANSAS

ADDITION TO HIGH SCHOOL
UNIFIED SCHOOL DISTRICT #320
WAMEGO, KANSAS
MISCELLANEOUS DETAILS AND GENERAL NOTES

DESIGN	MFQ
DRAWN	FAC
DATE	SEPT. 1979
FILE NO.	78-50B
SHEET NO.	S-8

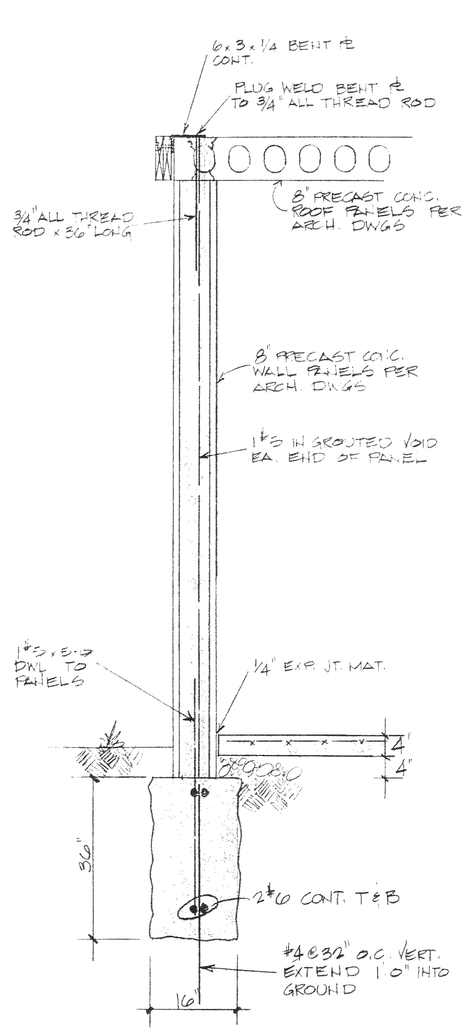

SECTION (1/59)
3/4" = 1'-0"

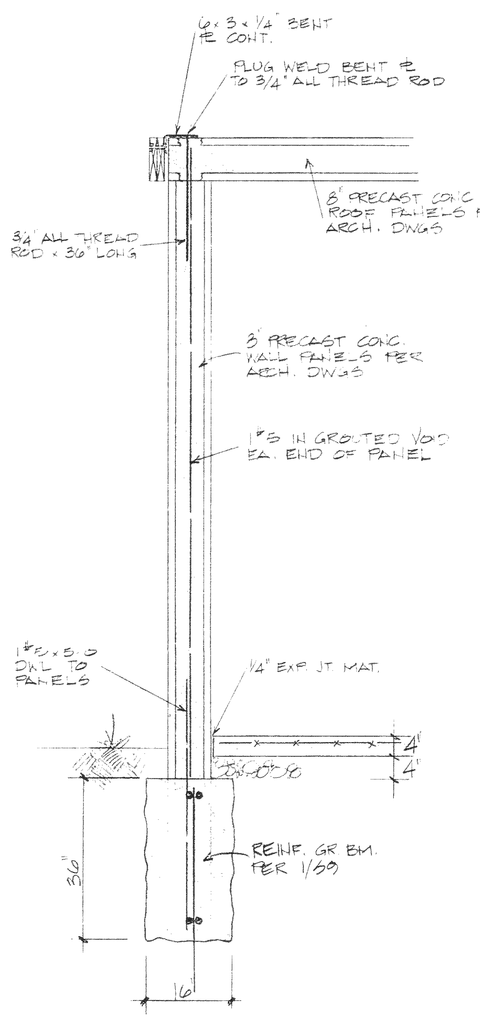

SECTION (2/59)
3/4" = 1'-0"

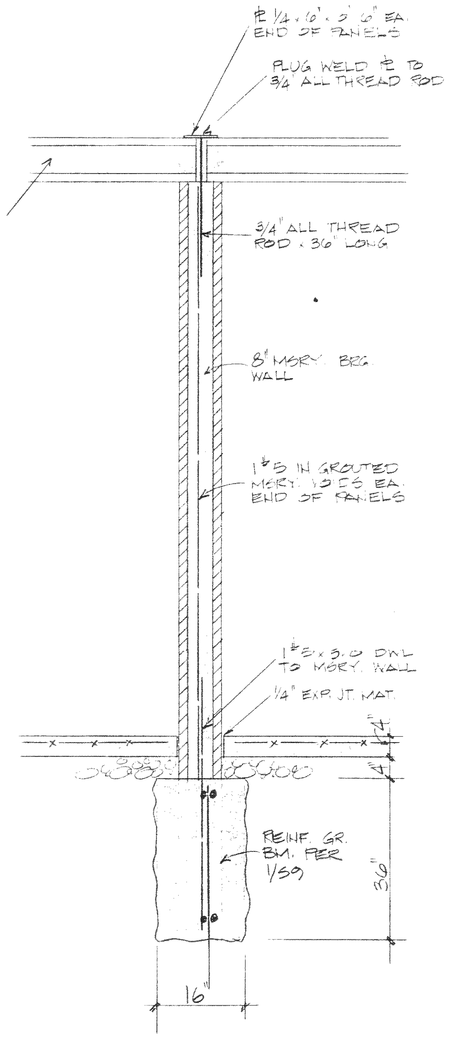

SECTION (3/59)
3/4" = 1'-0"

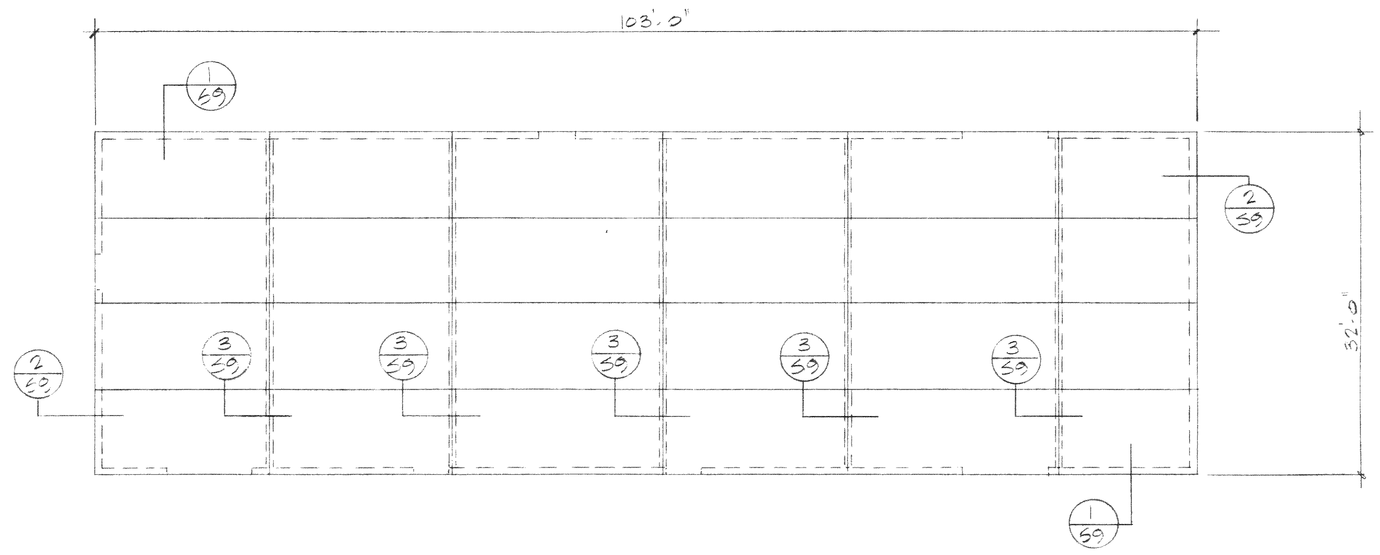

ROOF FRAMING PLAN - LOCKER BUILDING
1/8" = 1'-0"

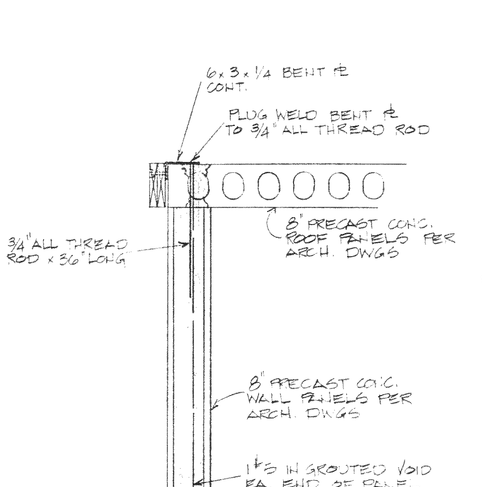

SECTION (4/59)
3/4" = 1'-0"

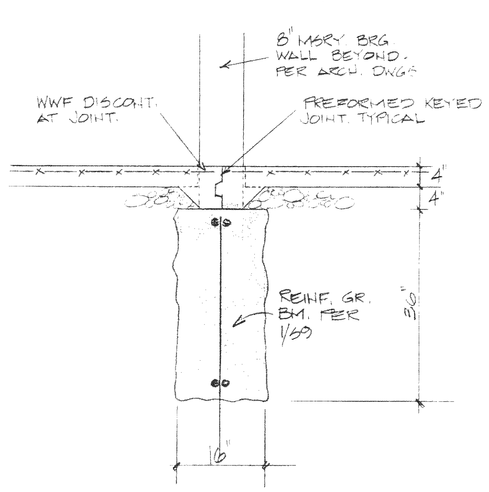

SECTION (5/59)
3/4" = 1'-0"

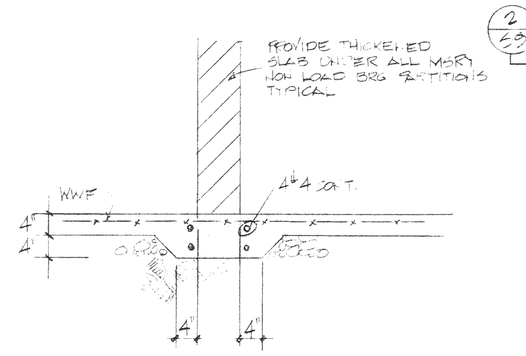

TYPICAL THICKENED SLAB IN SLAB ON GRADE

SECTION (6/59)
3/4" = 1'-0"

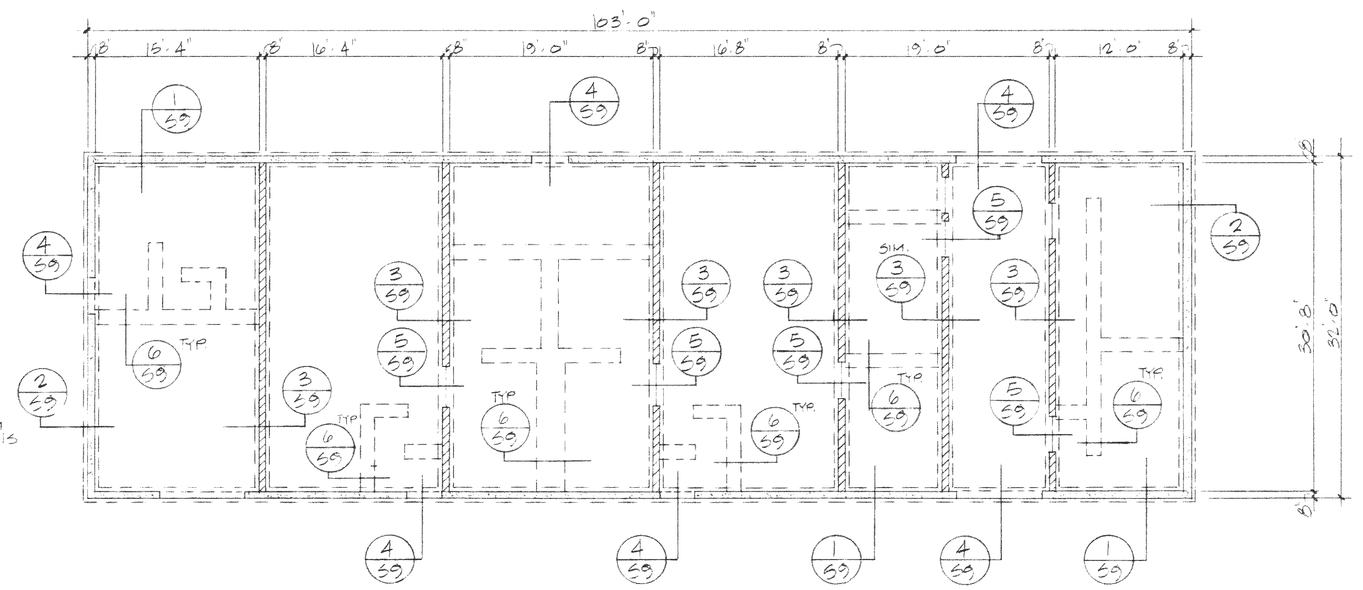

(ALTERNATE BID)
FOUNDATION AND FLOOR PLAN - LOCKER BUILDING
1/8" = 1'-0"

BOB D. CAMPBELL & COMPANY
CONSULTING STRUCTURAL ENGINEERS
1006 Bertrand Kansas City, Mo. 64120 816 231-4848

REVISION	DATE
B	

WILSON & COMPANY
SALINA KANSAS

ADDITION TO HIGH SCHOOL
UNIFIED SCHOOL DISTRICT #320
WAMEGO, KANSAS
LOCKER BUILDING DETAILS (ALTERNATE BID)

DESIGN	MFQ
DRAWN	FAC
DATE	SEPT. 1979
FILE NO.	78-508
SHEET NO.	S-9

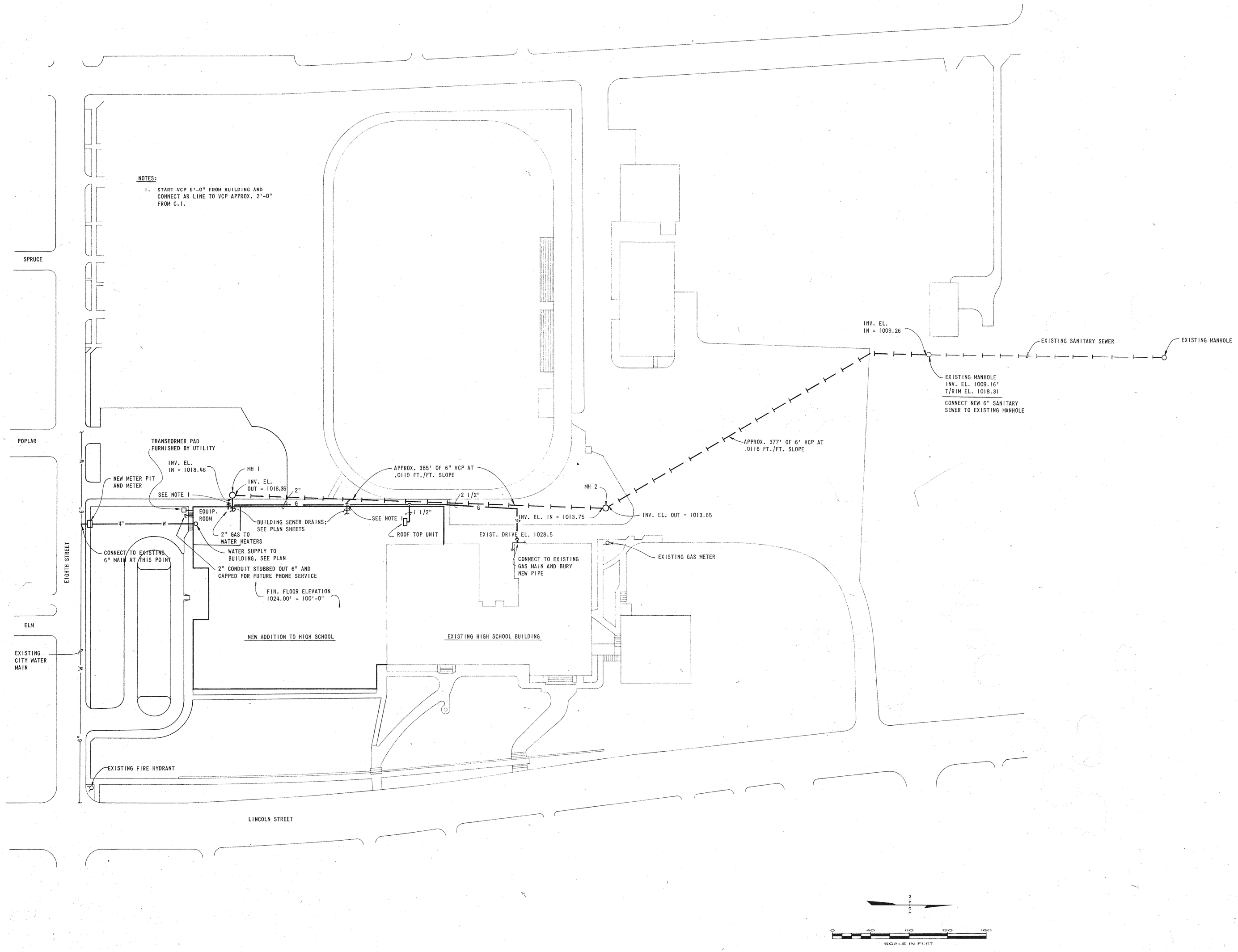

REVISION	DATE	BY

WILSON & COMPANY
SALINA KANSAS

ADDITION TO HIGH SCHOOL
UNIFIED SCHOOL DISTRICT #320
WAMEGO, KANSAS
SITE PLAN

ROBERT DAVID MILLER LICENSED 8198 KANSAS PROFESSIONAL ENGINEER

DESIGN	WDR
DRAWN	MLW
DATE	SEPT. 1979
FILE NO.	78-50B
SHEET NO.	ME-1

NOTES:

1. START VCP 5'-0" FROM BUILDING AND CONNECT AR LINE TO VCP APPROX. 2'-0" FROM C.I.

SPRUCE

POPLAR

TRANSFORMER PAD FURNISHED BY UTILITY

INV. EL. IN = 1018.46

NEW METER PIT AND METER

SEE NOTE 1

MH 1

INV. EL. OUT = 1018.36

2"

APPROX. 385' OF 6" VCP AT .0119 FT./FT. SLOPE

2 1/2"

MH 2

APPROX. 377' OF 6' VCP AT .0116 FT./FT. SLOPE

INV. EL. IN = 1013.75

INV. EL. OUT = 1013.65

EQUIP. ROOM

BUILDING SEWER DRAINS: SEE PLAN SHEETS

SEE NOTE 1

1 1/2"

ROOF TOP UNIT

EXIST. DRIVE EL. 1028.5

2" GAS TO WATER HEATERS

WATER SUPPLY TO BUILDING, SEE PLAN

CONNECT TO EXISTING 6" MAIN AT THIS POINT

2" CONDUIT STUBBED OUT 6" AND CAPPED FOR FUTURE PHONE SERVICE

FIN. FLOOR ELEVATION 1024.00' = 100'-0"

CONNECT TO EXISTING GAS MAIN AND BURY NEW PIPE

EXISTING GAS METER

EIGHTH STREET

ELM

EXISTING CITY WATER MAIN

NEW ADDITION TO HIGH SCHOOL

EXISTING HIGH SCHOOL BUILDING

EXISTING FIRE HYDRANT

LINCOLN STREET

INV. EL. IN = 1009.26

EXISTING SANITARY SEWER

EXISTING MANHOLE

EXISTING MANHOLE
INV. EL. 1009.16'
T/RIM EL. 1018.31

CONNECT NEW 6" SANITARY SEWER TO EXISTING MANHOLE

11. Sheet ME-1. In reference to sanitary sewer line from MH-2 to existing MH, following note is added:

"Mechanical Contractor shall be responsible for all costs in connection with removal and replacement of existing parking lot pavement as required for excavation for new sewer line. Pavement shall be replaced to full original thickness using materials similar and equal to or better than original. Sewer trench backfill shall be compacted full depth under pavement."

0 40 80 120 160

SCALE IN FEET

REVISION	DATE	BY

WILSON & COMPANY
SALINA KANSAS

ADDITION TO HIGH SCHOOL
UNIFIED SCHOOL DISTRICT #320
WAMEGO, KANSAS
SITE PLAN

8198

DESIGN	WDR
DRAWN	MLW
DATE	SEPT. 1979
FILE NO.	78-509
SHEET NO.	ME-1

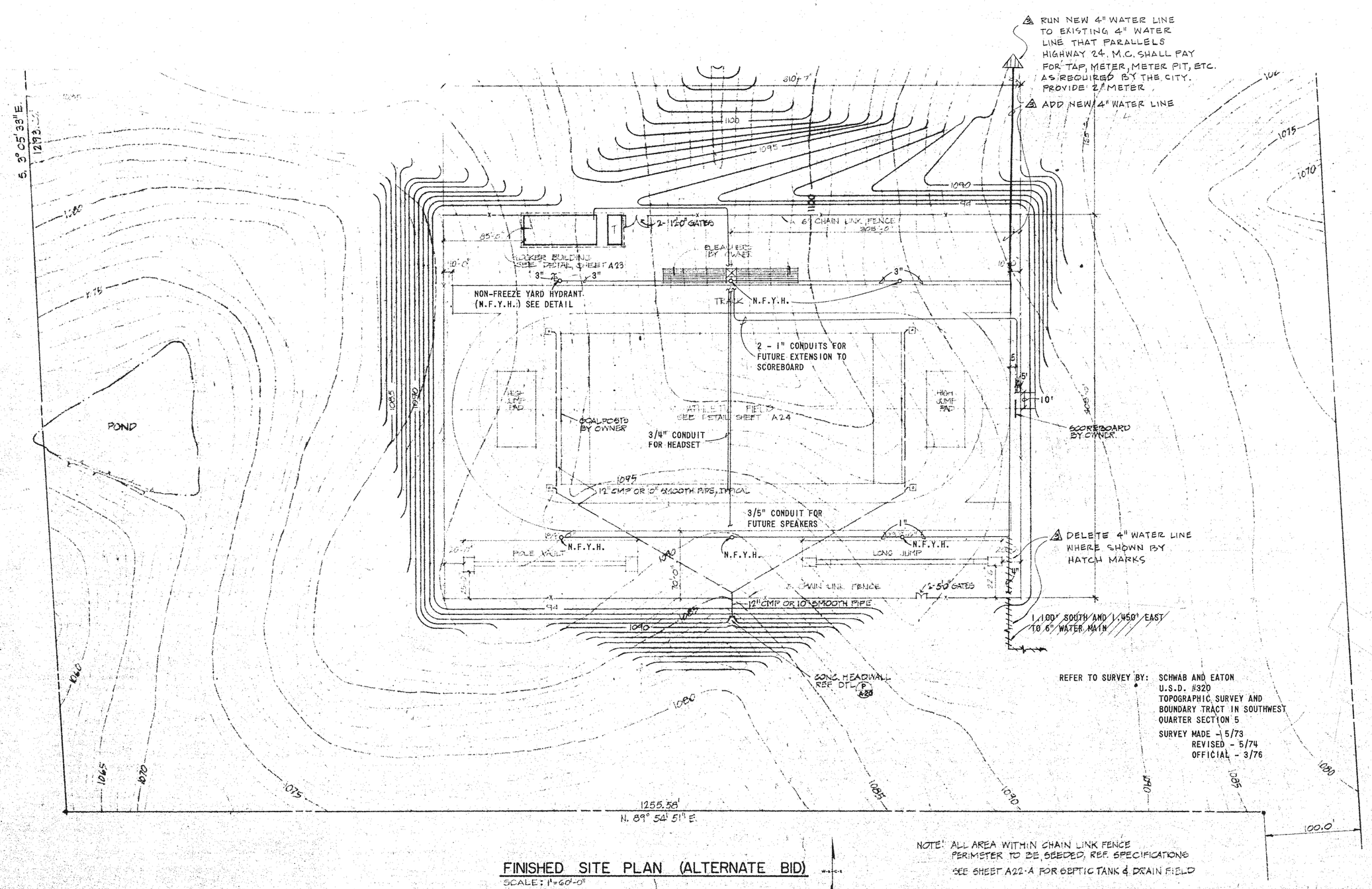

FINISHED SITE PLAN (ALTERNATE BID)

SCALE: 1"=60'-0"

NOTE: ALL AREA WITHIN CHAIN LINK FENCE PERIMETER TO BE SEEDED, REF. SPECIFICATIONS

SEE SHEET A22-A FOR SEPTIC TANK & DRAIN FIELD

REFER TO SURVEY BY: SCHWAB AND EATON
U.S.D. #320
TOPOGRAPHIC SURVEY AND BOUNDARY TRACT IN SOUTHWEST QUARTER SECTION 5
SURVEY MADE - 1/5/73
REVISED - 5/74
OFFICIAL - 3/76

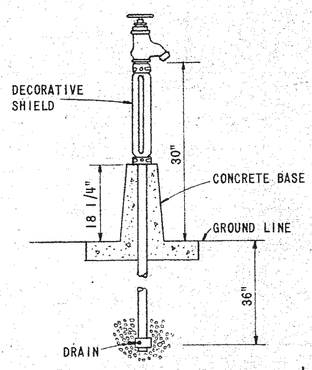

NON-FREEZE YARD HYDRANT

NO SCALE

NOTES:

1. UNDERGROUND TERMINATION OF CONDUITS SHALL BE MARKED BY A 6"x6" SQUARE OF CONCRETE AT GROUND LEVEL.

10. Added Drawing Sheet ME-2, dated October 1979 showing revised utilities for Alternate Bid-Athletic Field is issued, enclosed with and forming a part of this Addendum.

REVISION	DATE	BY
⚠ ADDENDUM NO. 3	2/10/79	RDM

WILSON & COMPANY
SALINA
KANSAS

ADDITION TO HIGH SCHOOL
UNIFIED SCHOOL DISTRICT #320
WAMEGO, KANSAS

FINISHED SITE PLAN - ALTERNATE BID

ROBERT E. ANDERSON 6755 REGISTERED PROFESSIONAL ENGINEER STATE OF KANSAS

DESIGN	MRE
DRAWN	PRW
DATE	OCT., 1979
FILE NO.	76-50B
SHEET NO.	ME-2

LIGHTING FIXTURE SCHEDULE

MARK	MANUFACTURER	CATALOG NO.		FIXTURE WATTS	MOUNTING TYPE	MOUNTING HEIGHT	LAMPS TYPE	LAMPS NO.	REMARKS
A	WILLIAMS	1224-FKA	277V	200	SURFACE	CEILING	F40/CW	4	
B	WILLIAMS	1122-FKA	277V	100	SURFACE	CEILING	F40/CW	2	
C	COLUMBIA	ES-140-M4	277V	50	SURFACE	CEILING	F40/CW	1	WITH WIRE GUARD
D	KENAL	7240	277V	100	SURFACE	CEILING	F40/CW	2	
E	KENAL	3808	120V	100	SURFACE	CEILING	60A/WP	2	
F	ALKCO	340H	277V	50	SURFACE	CEILING	F40/CW	1	
G	PORCELAIN LAMP HOLDER			100	SURFACE	CEILING	100 A	1	
H	PRESCOLITE	3813	120V	100	SURFACE	CEILING	100 A	1	
J	WILLIAMS	8022	277V	100	SURFACE	CEILING	F40/CW	2	
K	GENERAL ELECTRIC	C776N965	277V	400	PENDANT	SEE REMARKS	LU400	1	MOUNT BOTTOM OF FIXTURE FLUSH WITH BOTTOM OF JOIST
L	GUTH	MS1-12100F-4SLD1	277V	133	RECESSED	CEILING	H38JA-100DX	1	
M	GENERAL ELECTRIC	C768N454	277V		PENDANT	SEE REMARKS	LU150	1	MOUNT BOTTOM OF FIXTURE FLUSH WITH BOTTOM OF JOIST
N	APPLETON	AC1550STG	120V	150	SURFACE	CEILING	150A	1	
P	NOT USED								
Q	NOT USED								
R	LANDMARK	JB 1511	277V	133	SURFACE	WALL	H38JA-100DX	1	
S	ALKCO	SM-2058-2-OC	120V	15/200	SURFACE	CEILING	15 A / 200 A	1/1	
T	WILLIAMS	8822-A	277V	100	SURFACE	CEILING	F40/CW	2	
U	WILLIAMS	7520	277V	50	SURFACE	CEILING	F40/CW	1	WITH WIRE GUARD
V	APPLETON	ASB1550G	120V	150	SURFACE	WALL	150A	1	MOUNT BELOW EXHAUST HOOD
Ⓧ 1	NOT USED								
Ⓧ 2	PERFECLITE	UF-111-277	277V		-	-	-	-	

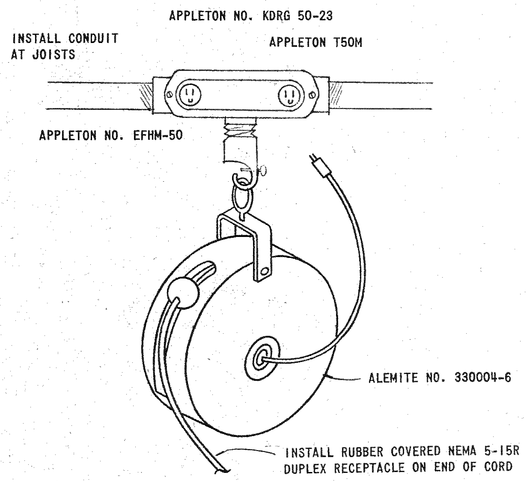

DROP CORD ASSEMBLY

NO SCALE

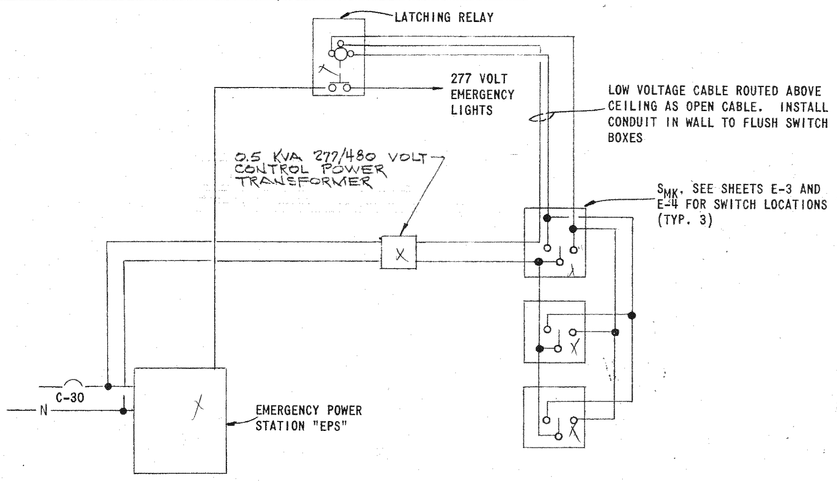

EMERGENCY AND WALK-THRU LIGHTING CONTROL DIAGRAM

NO SCALE

ELECTRICAL LEGEND

- Ⓐ, Ⓑ, Ⓒ — LIGHTING FIXTURE (TYPICAL SYMBOLS) REFER TO LIGHTING FIXTURE SCHEDULE. FIXTURES WITH SUBSCRIPT INDICATES SWITCHING SEQUENCE
- LIGHTING FIXTURE
- EXIT SIGN - REFER TO LIGHTING FIXTURE SCHEDULE
- #10 — CONDUIT AND WIRING. ARROWS INDICATE HOMERUN TO PANEL. HATCH MARKS INDICATE NUMBER OF CONDUCTORS IF MORE THAN TWO. NUMBER INDICATES SIZE IF OTHER THAN #12 AWG
- S_L — SWITCH, MOMENTARY CONTACT, KEY OPERATED (CORRIDOR LTG.) } NOTE 1
- S_{MK} — SWITCH, MOMENTARY CONTACT, KEY OPERATED (EMERG. LTG. SYSTEM) } NOTE 1
- S — SWITCH, SINGLE POLE
- S_K — SWITCH, SINGLE POLE, KEY OPERATED
- S_3 — SWITCH, THREE-WAY
- S_{K3} — SWITCH, THREE-WAY, KEY OPERATED
- S_P — SWITCH, SINGLE POLE WITH RED RUBY PILOT LIGHT
- S_M — MANUAL STARTER
- S_{MP} — SWITCH, MANUEL STARTER WITH PILOT LIGHT
- RECEPTACLE, DUPLEX 15 AMP, 125V, NEMA CONFIGURATION 5-15R FLUSH WALL MOUNT BOTTOM OF BOX 16" ABOVE FLOOR EXCEPT AS NOTED. (EDF INDICATES FOR DRINKING FOUNTAIN) (WP INDICATES WEATHERPROOF)
- RECEPTACLE, DUPLEX 15 AMP, 125V, NEMA CONFIGURATION 5-15R FLUSH FLOOR MOUNT
- EQUIPMENT CONNECTION
- DISCONNECTION SWITCH, FUSIBLE
- DISCONNECT SWITCH, NON-FUSIBLE
- PANELBOARD, SURFACE MOUNTED
- PANELBOARD, FLUSH MOUNTED
- MOTOR
- J — JUNCTION BOX
- MOTOR STARTER
- T — ELECTRIC THERMOSTAT, MTD. HT. 48" ℄
- $\odot_4$ — RECEPTACLE, (2) DUPLEX 15 AMP, 125V, NEMA CONFIGURATION 5-15R, FLUSH FLOOR MOUNT IN HUBBELL #B-4233 BOX WITH #C-3825 COVERS OR EQUAL MANUFACTURER
- $\odot_D$ — DRYER RECEPTACLE, 30 AMP, 125/250V, NEMA CONFIGURATION 10-30R FLUSH WALL MOUNT. BOTTOM OF BOX ABOVE FLOOR
- $\odot_R$ — RANGE RECEPTACLE, 50 AMP, 125/250V, NEMA CONFIGURATION 10-50R. PEDESTAL MOUNT 8" ABOVE FLOOR
- F — FIRE ALARM HORN WITH VISUAL SIGNAL, MTD. HT. 7'-4" ℄
- F — FIRE ALARM BREAK STATION, MTD. HT. 48" ℄
- DOOR HOLDER
- #16 TW CONDUCTOR
- #14 TW CONDUCTOR
- TV — SINGLE GANG OUTLET BOX WITH BLANK COVER PLATE AND 1/2" CONDUIT STUBBED OUT ABOVE LIFT OUT CEILING. FLUSH WALL MOUNT WITH BOTTOM OF BOX 16" ABOVE FLOOR. (FUTURE TV OUTLET)
- SPEAKER, FLUSH CEILING MOUNTED
- SPEAKER, FLUSH WALL MOUNTED
- CLOCK SPEAKER COMBINATION, WALL MOUNTED, 7'-4" TO TOP
- CALL-IN-SWITCH
- TELEPHONE OUTLET, SINGLE GANG, BOX WITH BLANK COVER PLATE AND 3/4" CONDUIT STUBBED OUT ABOVE LIFT OUT CEILING. FLUSH WALL MOUNT WITH BOTTOM OF BOX 16" ABOVE FLOOR.

NOTE 1 — S_L AND S_{MK} ARE SAME SWITCH TYPE, IDENTIFIED AS TO FUNCTION.

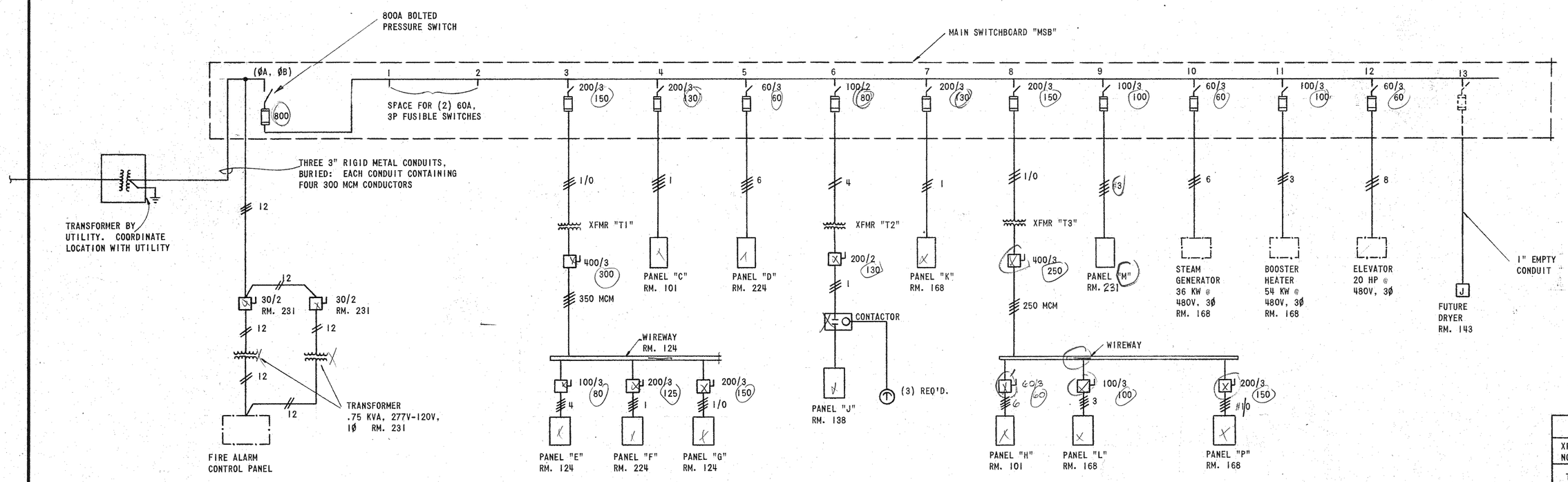

MAIN SWITCHBOARD RATINGS

VOLTAGE	277/480 VOLTS
CONTINUOUS CURRENT RATING OF THROUGH BUS	800 AMPS
SERVICE	3 PHASE, 4-WIRE
NEUTRAL SIZE	HALF-CAPACITY
SHORT-CIRCUIT CURRENT RATING	-
INCOMING FEEDER	CABLE
INCOMING LINE LOCATION	RIGHT SIDE
GROUND BUS	FULL LENGTH
LABEL	UL SERVICE ENTRANCE LABEL
POWER COMPANY METERING	NONE
INSTRUMENTATION	NONE
ENCLOSURE CONSTRUCTION	INDOOR

CONNECTED LOAD	785 KVA
ESTIMATED MAXIMUM DEMAND	556 KVA

TRANSFORMER SCHEDULE

XFMR. NO.	RM. NO.	DESCRIPTION
T1	124	112.5 KVA, 480V ~ 120/208V, 3Ø
T2	143	25 KVA, 480V ~ 120/240V, 1Ø
T3	231	75 KVA, 480V ~ 120/208V, 3Ø

REVISION | DATE | BY

WILSON & COMPANY
KANSAS
SALINA

ADDITION TO HIGH SCHOOL
UNIFIED SCHOOL DISTRICT #320
WAMEGO, KANSAS
ELECTRICAL LEGEND AND SCHEDULES

RODNEY L. ANDERSON 6786 REGISTERED PROFESSIONAL ENGINEER KANSAS

DESIGN	WDB
DRAWN	MEM
DATE	SEPT. 1979
FILE NO.	78-50B
SHEET NO.	E-2

LIGHTING FIXTURE SCHEDULE

MARK	MANUFACTURER	CATALOG NO.		FIXTURE WATTS	MOUNTING TYPE	MOUNTING HEIGHT	LAMPS TYPE	LAMPS NO.	REMARKS
A	WILLIAMS	1224-FKA	277V	200	SURFACE	CEILING	F40/CW	4	
B	WILLIAMS	1122-FKA	277V	100	SURFACE	CEILING	F40/CW	2	
C	COLUMBIA	ES-140-M4	277V	50	SURFACE	CEILING	F40/CW	1	WITH WIRE GUARD
D	KENL	7240	277V	100	SURFACE	CEILING-	F40/CW	2	
E	KENL	3808	120V	100	SURFACE	CEILING	60A/WP	2	
F	ALKO	340H	277V	50	SURFACE	CEILING	F40/CW	1	
G	PORCELAIN LAMP HOLDER			100	SURFACE	CEILING	100 A	1	
H	PRESCOLITE	3813	120V	100	SURFACE	CEILING	100 A	1	
J	WILLIAMS	8022	277V	100	SURFACE	CEILING	F40/CW	2	
K	GENERAL ELECTRIC	C776N965	277V	400	PENDANT	SEE REMARKS	LU400	1	MOUNT BOTTOM OF FIXTURE FLUSH WITH BOTTOM OF JOIST
L	GUTH	MS1-12100F-4SLD1	277V	133	RECESSED	CEILING	H38JA-100DX	1	
M	GENERAL ELECTRIC	C768N454	277V		PENDANT	SEE REMARKS	LU150	1	MOUNT BOTTOM OF FIXTURE FLUSH WITH BOTTOM OF JOIST
N	APPLETON	AC155OSTG	120V	150	SURFACE	CEILING	150A	1	
P	NOT USED								
Q	NOT USED								
R	LANDMARK	JB 15:1	277V	133	SURFACE	WALL	H38JA-100DX	1	
S	ALKO	SM-2058-2-OC	120V	15/200	SURFACE	CEILING	15 A/200 A	1/1	
T	WILLIAMS	8822-A	277V	100	SURFACE	CEILING	F40/CW	2	
U	WILLIAMS	7520	277V	50	SURFACE	CEILING	F40/CW	1	WITH WIRE GUARD
V	APPLETON	ASB1550G	120V	150	SURFACE	WALL	150A	1	MOUNT BELOW EXHAUST HOOD
⊗ 1	NOT USED								
⊗ 2	PERFECLITE	UF-111-277	277V		-	-	-	-	

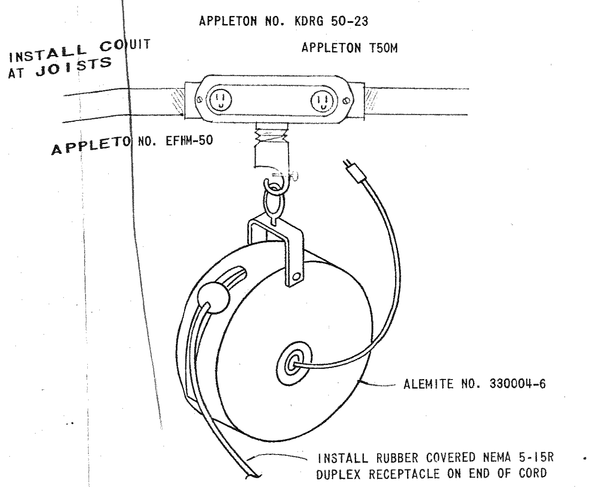

DROP CORD ASSEMBLY

NO SCALE

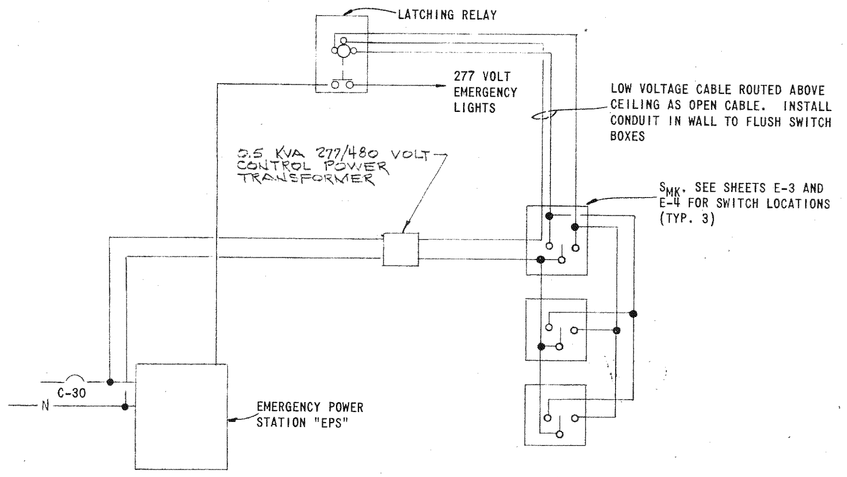

EMERGENCY AND WALK-THRU LIGHTING CONTROL DIAGRAM

NO SCALE

ELECTRICAL LEGEND

- (A), (B), (C) — LIGHTING FIXTURE (TYPICAL SYMBOLS) REFER TO LIGHTING FIXTURE SCHEDULE. FIXTURES WITH SUBSCRIPT INDICATES SWITCHING SEQUENCE
- LIGHTING FIXTURE
- EXIT SIGN - REFER TO LIGHTING FIXTURE SCHEDULE
- #10 — CONDUIT AND WIRING. ARROWS INDICATE HOMERUN TO PANEL. HATCH MARKS INDICATE NUMBER OF CONDUCTORS IF MORE THAN TWO. NUMBER INDICATES SIZE IF OTHER THAN #12 AWG
- S_L — SWITCH, MOMENTARY CONTACT, KEY OPERATED (CORRIDOR LTG.) } NOTE 1
- S_{MK} — SWITCH, MOMENTARY CONTACT, KEY OPERATED (EMERG. LTG. SYSTEM) } NOTE 1
- S — SWITCH, SINGLE POLE
- S_K — SWITCH, SINGLE POLE, KEY OPERATED
- S_3 — SWITCH, THREE-WAY
- S_{K3} — SWITCH, THREE-WAY, KEY OPERATED
- S_P — SWITCH, SINGLE POLE WITH RED RUBY PILOT LIGHT
- S_M — MANUAL STARTER
- S_{MP} — SWITCH, MANUEL STARTER WITH PILOT LIGHT
- RECEPTACLE, DUPLEX 15 AMP, 125V, NEMA CONFIGURATION 5-15R FLUSH WALL MOUNT BOTTOM OF BOX 16" ABOVE FLOOR EXCEPT AS NOTED. (EDF INDICATES FOR DRINKING FOUNTAIN) (WP INDICATES WEATHERPROOF)
- RECEPTACLE, DUPLEX 15 AMP, 125V, NEMA CONFIGURATION 5-15R FLUSH FLOOR MOUNT
- EQUIPMENT CONNECTION
- DISCONNECTION SWITCH, FUSIBLE
- DISCONNECT SWITCH, NON-FUSIBLE
- PANELBOARD, SURFACE MOUNTED
- PANELBOARD, FLUSH MOUNTED
- MOTOR
- J — JUNCTION BOX
- MOTOR STARTER
- T — ELECTRIC THERMOSTAT, MTD. HT. 48" ℄
- $\odot_4$ — RECEPTACLE, (2) DUPLEX 15 AMP, 125V, NEMA CONFIGURATION 5-15R, FLUSH FLOOR MOUNT IN HUBBELL #B-4233 BOX WITH #C-3825 COVERS OR EQUAL MANUFACTURER
- $\odot_D$ — DRYER RECEPTACLE, 30 AMP, 125/250V, NEMA CONFIGURATION 10-30R FLUSH WALL MOUNT. BOTTOM OF BOX ABOVE FLOOR
- $\odot_R$ — RANGE RECEPTACLE, 50 AMP, 125/250V, NEMA CONFIGURATION 10-50R. PEDESTAL MOUNT 8" ABOVE FLOOR
- F — FIRE ALARM HORN WITH VISUAL SIGNAL, MTD. HT. 7'-4" ℄
- F — FIRE ALARM BREAK STATION, MTD. HT. 48" ℄
- DOOR HOLDER
- #16 TW CONDUCTOR
- #14 TW CONDUCTOR
- TV — SINGLE GANG OUTLET BOX WITH BLANK COVER PLATE AND 1/2" CONDUIT STUBBED OUT ABOVE LIFT OUT CEILING. FLUSH WALL MOUNT WITH BOTTOM OF BOX 16" ABOVE FLOOR. (FUTURE TV OUTLET)
- SPEAKER, FLUSH CEILING MOUNTED
- SPEAKER, FLUSH WALL MOUNTED
- CLOCK SPEAKER COMBINATION, WALL MOUNTED, 7'-4" TO TOP BOTTOM
- CALL-IN-SWITCH
- TELEPHONE OUTLET, SINGLE GANG, BOX WITH BLANK COVER PLATE AND 3/4" CONDUIT STUBBED OUT ABOVE LIFT OUT CEILING. FLUSH WALL MOUNT WITH BOTTOM OF BOX 16" ABOVE FLOOR.

NOTE 1 — S_L AND S_{MK} ARE SAME SWITCH TYPE, IDENTIFIED AS TO FUNCTION.

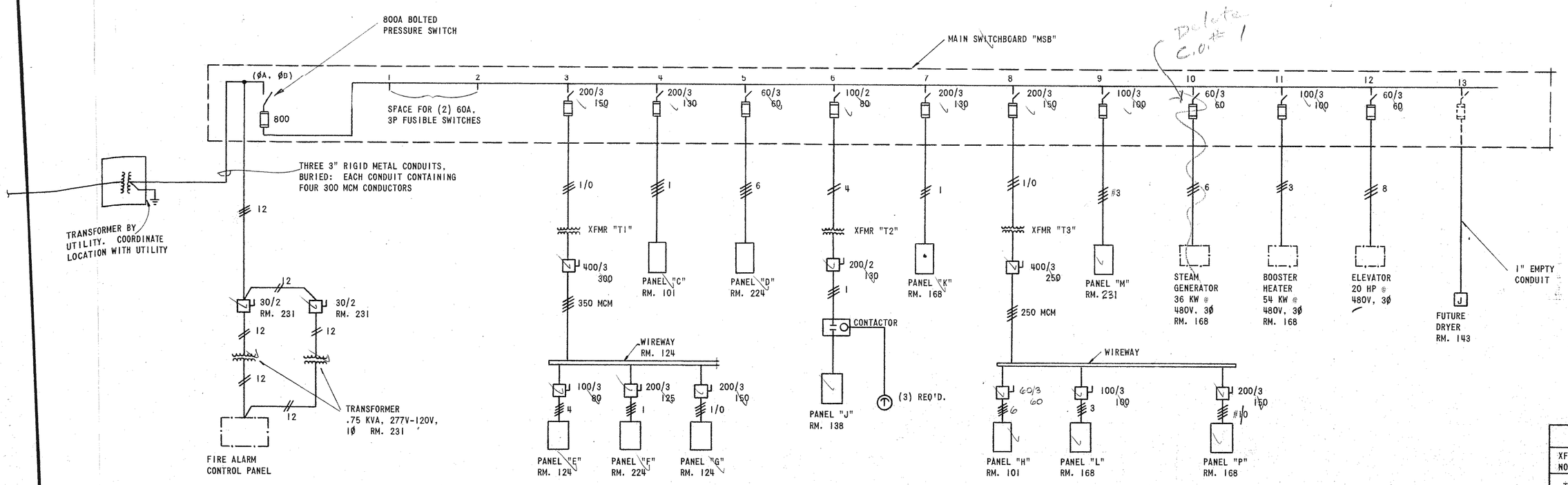

MAIN SWITCHBOARD RATINGS

VOLTAGE	277/480 VOLTS
CONTINUOUS CURRENT RATING OF THROUGH BUS	600 AMPS
SERVICE	3 PHASE, 4-WIRE
NEUTRAL SIZE	HALF-CAPACITY
SHORT-CIRCUIT CURRENT RATING	-
INCOMING FEEDER	CABLE
INCOMING LINE LOCATION	RIGHT SIDE
GROUND BUS	FULL LENGTH
LABEL	UL SERVICE ENTRANCE LABEL
POWER COMPANY METERING	NONE
INSTRUMENTATION	NONE
ENCLOSURE CONSTRUCTION	INDOOR

CONNECTED LOAD	785 KVA
ESTIMATED MAXIMUM DEMAND	556 KVA

TRANSFORMER SCHEDULE

XFMR. NO.	RM. NO.	DESCRIPTION
T1	124	112.5 KVA, 480V ~ 120/208V, 3ø
T2	143	25 KVA, 480V ~ 120/240V, 1ø
T3	231	75 KVA, 480V ~ 120/208V, 3ø

BY	DATE	REVISION

WILSON & COMPANY
KANSAS
SALINA

ADDITION TO HIGH SCHOOL
UNIFIED SCHOOL DISTRICT #320
WAMEGO, KANSAS
ELECTRICAL LEGEND AND SCHEDULES

ROBERT L. ANDERSON 6786 REGISTERED PROFESSIONAL ENGINEER

DESIGN	WDB
DRAWN	MEM
DATE	SEPT. 1979
FILE NO.	78-508
SHEET NO.	E-2

LIGHTING FIXTURE SCHEDULE ⚠2

MARK	MANUFACTURER	CATALOG NO.		FIXTURE WATTS	MOUNTING TYPE	MOUNTING HEIGHT	LAMPS TYPE	LAMPS NO.	REMARKS
A	WILLIAMS	1224-FKA	277V	200	SURFACE	CEILING	F40/CW	4	
B	WILLIAMS	1122-FKA	277V	100	SURFACE	CEILING	F40/CW	2	
C	WILLIAMS	7520-S/W-75-WG-75	277V	50	SURFACE	CEILING	F40/CW	1	
D	KENALL	7240	277V	100	SURFACE	CEILING	F40/CW	2	
E	KENALL	3808	120V	100	SURFACE	CEILING	60I/WP	2	
F	ALKCO	3401	277V	50	SURFACE	CEILING	F40/CW	1	
G	PORCELAIN LAMP HOLDER			100	SURFACE	CEILING	100 A	1	
H	PRESCOLITE	3813	120V	100	SURFACE	CEILING	100 A	1	
J	WILLIAMS	8022-15	277V	100	SURFACE	CEILING	F40/CW	2	
K	GENERAL ELECTRIC	C77GN955	277V	400	PENDANT	SEE REMARKS	LU400	1	MOUNT BOTTOM OF FIXTURE FLUSH WITH BOTTOM OF JOIST
L	HOLOCAST	V-54MV-PRV-BW	277V	133	RECESSED	CEILING	H38JA-100DX	1	
M	GENERAL ELECTRIC	C76BN454	277V		PENDANT	SEE REMARKS	LU150	1	MOUNT BOTTOM OF FIXTURE FLUSH WITH BOTTOM OF JOIST
N	APPLETON	AC1550STG	120V	150	SURFACE	CEILING	150A	1	
P	NOT USED								
Q	WILLIAMS	8022-15-WG-80	277V	100	SURFACE	CEILING	F40/CW	2	
R	LANDMARK	J9 15-1	277V	133	SURFACE	WALL	H38JA-100DX	1	
S	ALKCO	SM-2058-2-OC	120V	150 W 200	SURFACE	CEILING	150 A 200 A	1	
T	WILLIAMS	8822-A	277V	100	SURFACE	CEILING	F40/CW	2	
U	WILLIAMS	7520	277V	50	SURFACE	CEILING	F40/CW	1	WITH WIRE GUARD
V	APPLETON	ASB1550G	120V	150	SURFACE	WALL	150A	1	MOUNT BELOW EXHAUST HOOD
W	DUAL LITE	2-EDF-V580-2-BR-A3-V-MON-TD-RRG-12V		56	WALL SURFACE	TOP OF LIGHT HEADS 6" BELOW CEILING	NF500	2	INSTALL BOG WIRE GUARD OVER UNIT
X	NOT USED								
Z	PERFECLITE	UF-111-277	277V		-	-	-	-	

ELECTRICAL LEGEND ⚠2

- LIGHTING FIXTURE (TYPICAL SYMBOLS) REFER TO LIGHTING FIXTURE SCHEDULE. FIXTURES WITH SUBSCRIPT INDICATES SWITCHING SEQUENCE
- LIGHTING FIXTURE ON EMERGENCY CIRCUIT
- EXIT SIGN - REFER TO LIGHTING FIXTURE SCHEDULE
- #10 — CONDUIT AND WIRING. ARROWS INDICATE HOMERUN TO PANEL. HATCH MARKS INDICATE NUMBER OF CONDUCTORS IF MORE THAN TWO. NUMBER INDICATES SIZE IF OTHER THAN #12 AWG
- S_L — SWITCH, MOMENTARY CONTACT, KEY OPERATED (CORRIDOR LTG.) } NOTE 1
- S_{MK} — SWITCH, MOMENTARY CONTACT, KEY OPERATED (EMERG. LTG. SYSTEM) } NOTE 1
- S — SWITCH, SINGLE POLE
- S_K — SWITCH, SINGLE POLE, KEY OPERATED
- S_3 — SWITCH, THREE-WAY
- S_{K3} — SWITCH, THREE-WAY, KEY OPERATED
- S_P — SWITCH, SINGLE POLE WITH RED RUBY PILOT LIGHT
- S_M — MANUAL STARTER
- S_{MP} — MANUEL STARTER WITH PILOT LIGHT
- RECEPTACLE, DUPLEX 15 AMP. 125V, NEMA CONFIGURATION 5-15R FLUSH WALL MOUNT BOTTOM OF BOX 16" ABOVE FLOOR EXCEPT AS NOTED. (EDF INDICATES FOR DRINKING FOUNTAIN) (WP INDICATES WEATHERPROOF)
- RECEPTACLE, DUPLEX 15 AMP. 125V. NEMA CONFIGURATION 5-15R FLUSH FLOOR MOUNT
- EQUIPMENT CONNECTION
- DISCONNECTION SWITCH, FUSIBLE
- DISCONNECT SWITCH, NON-FUSIBLE
- PANELBOARD, SURFACE MOUNTED
- PANELBOARD, FLUSH MOUNTED
- MOTOR
- JUNCTION BOX
- MOTOR STARTER
- ELECTRIC THERMOSTAT, MTD. HT. 48" ℄
- S_2 — SWITCH, DOUBLE POLE
- COMBINATION MOTOR STARTER
- MUSHROOM HEAD SWITCH ("STOP POWER" SYSTEM)
- PE SWITCH (BY MECH)
- PUSHBUTTON STOP-START
- PILOT LIGHT
- RECEPTACLE, SINGLE 15 AMP. 125V, NEMA CONFIGURATION 5-15R, FLUSH WALL MOUNT BOTTOM OF BOX 90" ABOVE FLOOR
- RECEPTACLE, (2) DUPLEX 15 AMP, 125V, NEMA CONFIGURATION 5-15R, FLUSH FLOOR MOUNT IN HUBBELL FB-4233 BOX WITH SB-3825 COVERS OR EQUAL MANUFACTURER
- DRYER RECEPTACLE, 30 AMP, 125/250V, NEMA CONFIGURATION 10-30R FLUSH WALL MOUNT, BOTTOM OF BOX 16" ABOVE FLOOR
- RANGE RECEPTACLE, 50 AMP, 125/250V, NEMA CONFIGURATION 10-50R. PEDESTAL MOUNT 8" ABOVE FLOOR ℄
- FIRE ALARM HORN WITH VISUAL SIGNAL, MTD. HT. 7'-4" ℄
- FIRE ALARM BREAK STATION, MTD. HT. 48" ℄
- DOOR HOLDER
- #16 TW CONDUCTOR
- #14 TW CONDUCTOR
- SINGLE GANG OUTLET BOX WITH BLANK COVER PLATE AND 1/2" CONDUIT STUBBED OUT ABOVE LIFT OUT CEILING. FLUSH WALL MOUNT WITH BOTTOM OF BOX 16" ABOVE FLOOR. (FUTURE TV OUTLET)
- SPEAKER, FLUSH CEILING MOUNTED
- SPEAKER, FLUSH WALL MOUNTED
- CLOCK SPEAKER COMBINATION, WALL MOUNTED, 7'-4" TO TOP
- CALL-IN-SWITCH
- TELEPHONE OUTLET, SINGLE GANG, BOX WITH BLANK COVER PLATE AND 3/4" CONDUIT STUBBED OUT ABOVE LIFT OUT CEILING. FLUSH WALL MOUNT WITH BOTTOM OF BOX 16" ABOVE FLOOR.

NOTE 1 — S_L AND S_{MK} ARE SAME SWITCH TYPE, IDENTIFIED AS TO FUNCTION.

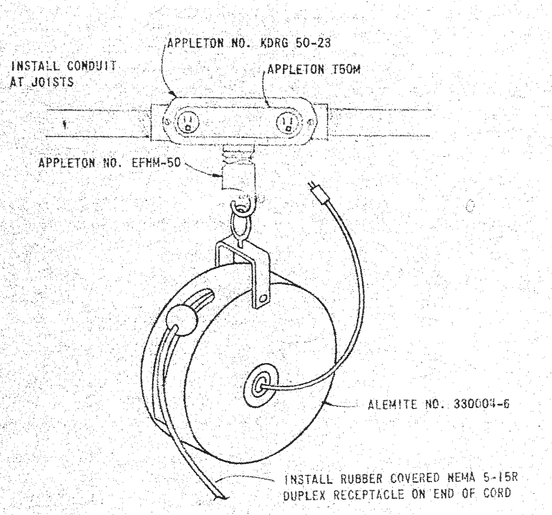

DROP CORD ASSEMBLY

NO SCALE

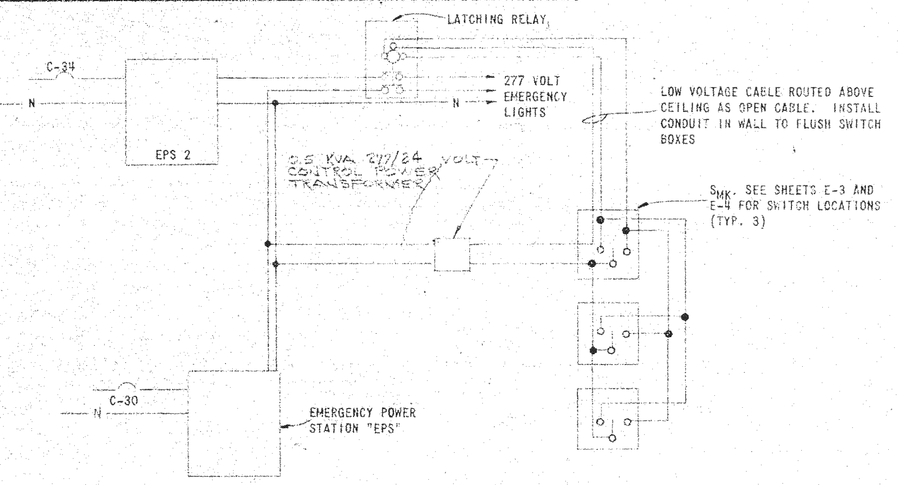

EMERGENCY AND WALK-THRU LIGHTING CONTROL DIAGRAM

NO SCALE

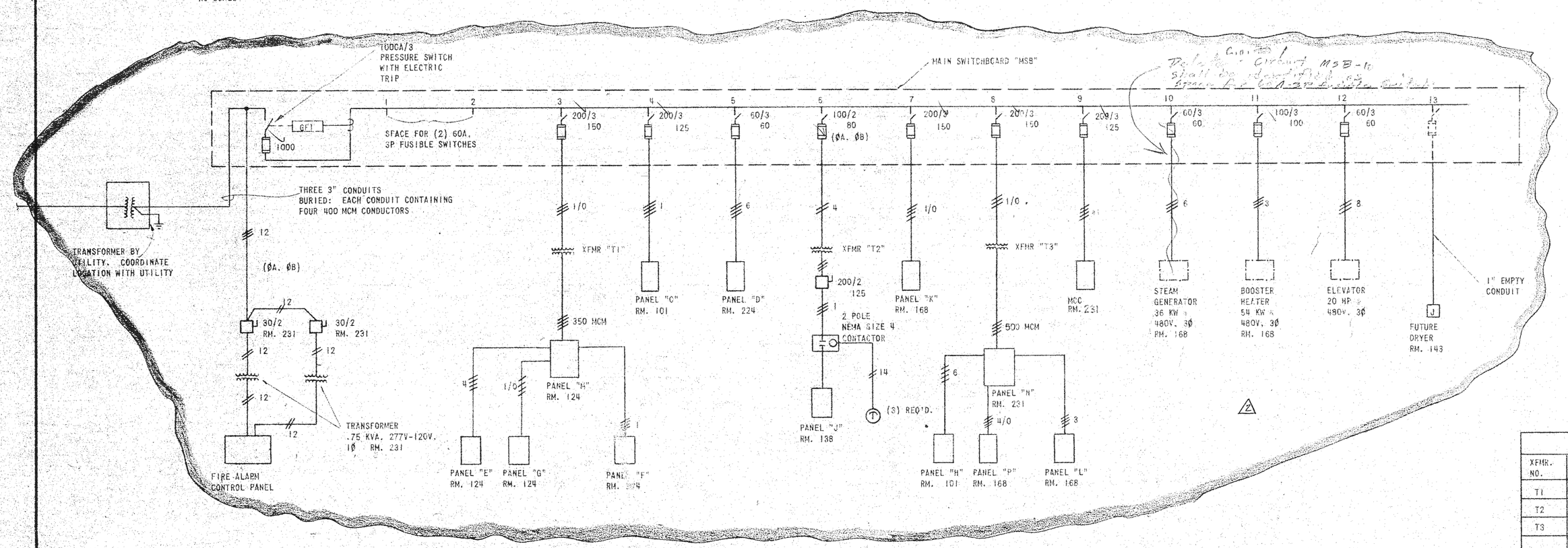

MAIN SWITCHBOARD RATINGS

VOLTAGE	277/480 VOLTS
CONTINUOUS CURRENT RATING OF THROUGH BUS	800 AMPS
SERVICE	3 PHASE, 4-WIRE
NEUTRAL SIZE	HALF-CAPACITY
SHORT-CIRCUIT CURRENT RATING	-
INCOMING FEEDER	CABLE
INCOMING LINE LOCATION	LEFT SIDE
GROUND BUS	FULL LENGTH
LABEL	UL SERVICE ENTRANCE LABEL
POWER COMPANY METERING	NONE
INSTRUMENTATION	NONE
ENCLOSURE CONSTRUCTION	INDOOR

CONNECTED LOAD	867 KVA
ESTIMATED MAXIMUM DEMAND	619 KVA

⚠2

TRANSFORMER SCHEDULE

XFMR. NO.	RM. NO.	DESCRIPTION
T1	124	112.5 KVA. 480V ~ 120/208V. 3Ø
T2	143	25 KVA. 480V ~ 120/240V. 1Ø
T3	231	150 KVA. 480V ~ 120/208V. 3Ø
		⚠2

REVISION	DATE	BY
⚠ ADDENDUM No. 2	2/9/79	MRE

WILSON & COMPANY
SALINA, KANSAS

ADDITION TO HIGH SCHOOL
UNIFIED SCHOOL DISTRICT #320
WAMEGO, KANSAS
ELECTRICAL LEGEND AND SCHEDULES

DESIGN	WDB
DRAWN	MEM
DATE	SEPT. 1979
FILE NO.	78-50B
SHEET NO.	E-2

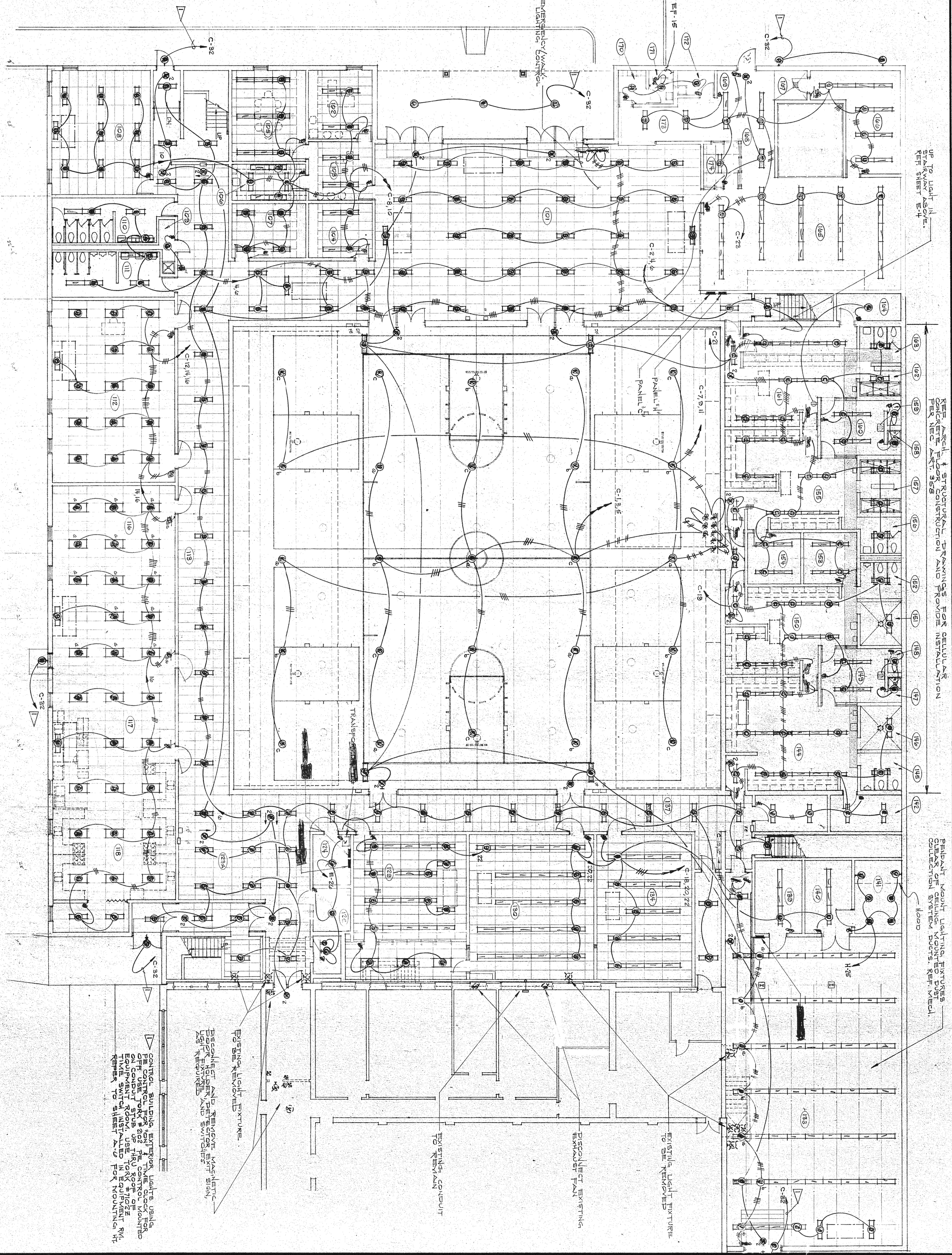

GROUND FLOOR PLAN

SCALE 1/8" = 1'-0"

ADDITION TO HIGH SCHOOL
UNIFIED SCHOOL DISTRICT #320
WAMEGO, KANSAS
GROUND FLOOR PLAN
LIGHTING

RODNEY L. ANDERSON LICENSED 6786 KANSAS PROFESSIONAL ENGINEER

WILSON & COMPANY

DESIGN	RLA
DRAWN	WDB
DATE	SEPT. 1979
FILE NO.	78-50B
SHEET NO.	E-3

REVISION	DATE	BY

GROUND FLOOR PLAN

SCALE: 1/8" = 1'-0"

TO EMERSENCY/WALK-THRU LIGHTING CONTROL

TO EF-15

UP TO LIGHT IN STAIRWAY ABOVE. REF. SHEET E-4

REF. ARCH. & STRUCTURAL DRAWINGS FOR CELLULAR CONCRETE FLOOR CONSTRUCTION AND SLEEVE INSTALLATION PER NEC ART. 358

PENDANT MOUNT LIGHTING FIXTURES — CLEAR OF CEILING MOUNTED DUCTS. REF. MECH. COLLECTION SYSTEM DUCTS.

PANEL "H"

PANEL "C"

PANEL "F"

TRANSFORMER "T"

PANEL "G"

PANEL "J"

HOOD

EXISTING LIGHT FIXTURE TO BE REMOVED.

DISCONNECT AND REMOVE MAGNETIC DOOR HOLDER AND DETECTOR. EXIT SIGN, LIGHT FIXTURE AND SWITCHES AS REQUIRED

CONTROL BUILDING EXTERIOR LIGHTS USING "ON" TIME CLOCK FOR OFF CONTROL FOR #202 PE CONTROL MOUNTED ON CONDUIT STUB UP THRU ROOF OF EQUIPMENT ROOM. USE TORK #7022 TIME SWITCH INSTALLED IN EQUIPMENT RM. REFER TO SHEET A-6 FOR MOUNTING HT.

EXISTING CONDUIT TO REMAIN

DISCONNECT EXISTING EXHAUST FAN

EXISTING LIGHT FIXTURE TO BE REMOVED

EXISTING LIGHT FIXTURE TO BE REMOVED

ADDITION TO HIGH SCHOOL

UNIFIED SCHOOL DISTRICT #320

WAMEGO, KANSAS

GROUND FLOOR PLAN
LIGHTING

RODNEY L. ANDERSON LICENSED 6786 KANSAS PROFESSIONAL ENGINEER

DESIGN	RLA
DRAWN	WDB
DATE	SEPT. 1979
FILE NO.	78-508
SHEET NO.	E-3

WILSON & COMPANY

REVISION	DATE	BY

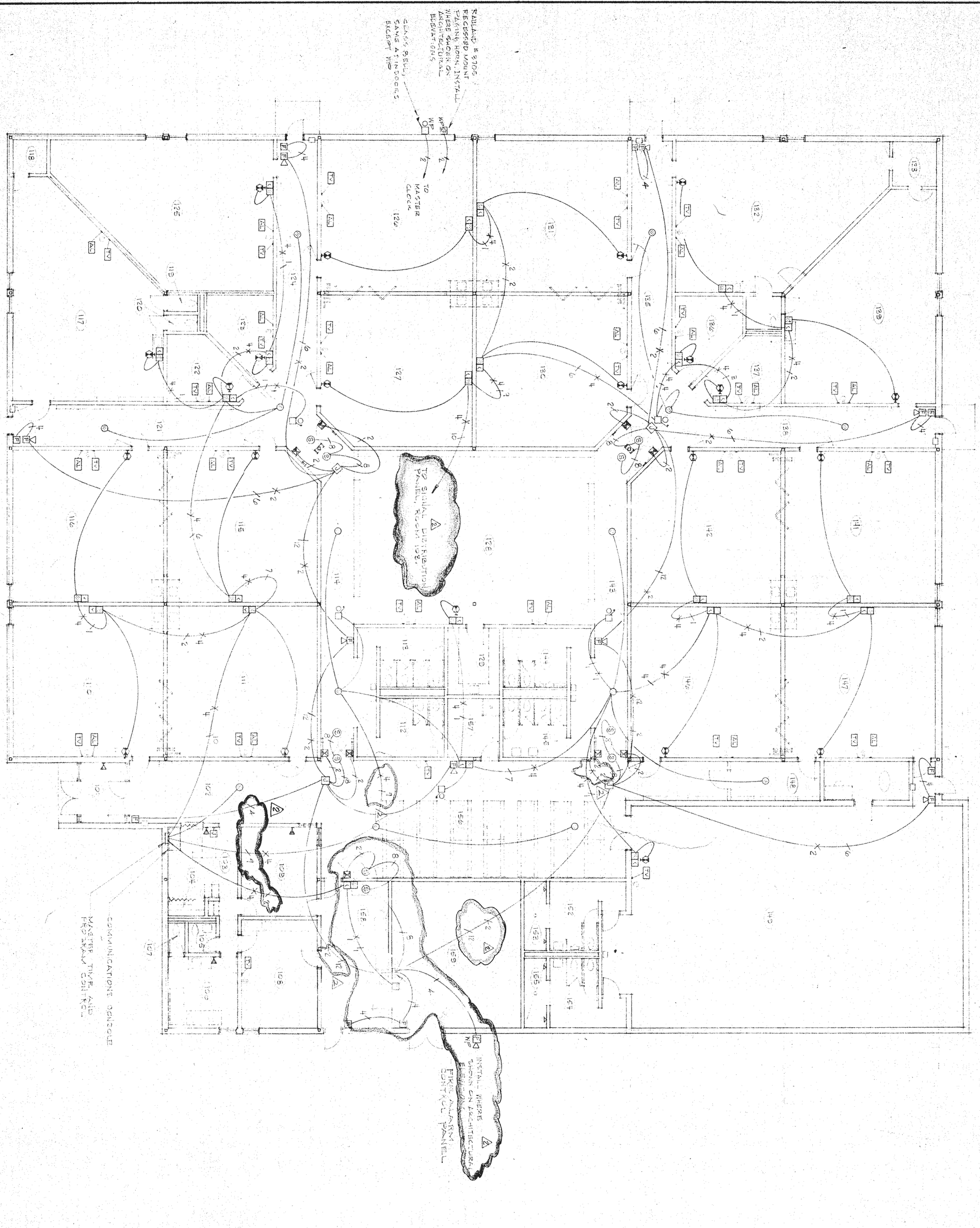

A NEW ELEMENTARY SCHOOL
UNIFIED SCHOOL DISTRICT #320
WAMEGO, KANSAS
FIRE ALARM AND COMMUNICATIONS

RODNEY L. ANDERSON LICENSED 6786 KANSAS PROFESSIONAL ENGINEER

WILSON & COMPANY
SALINA KANSAS

REVISION	DATE	BY
② ADDENDUM NO. 2	28/9/79	MRE

DESIGN RLA
DRAWN WDB
DATE SEPT. 1979
FILE NO. 78-508
SHEET NO. E-4

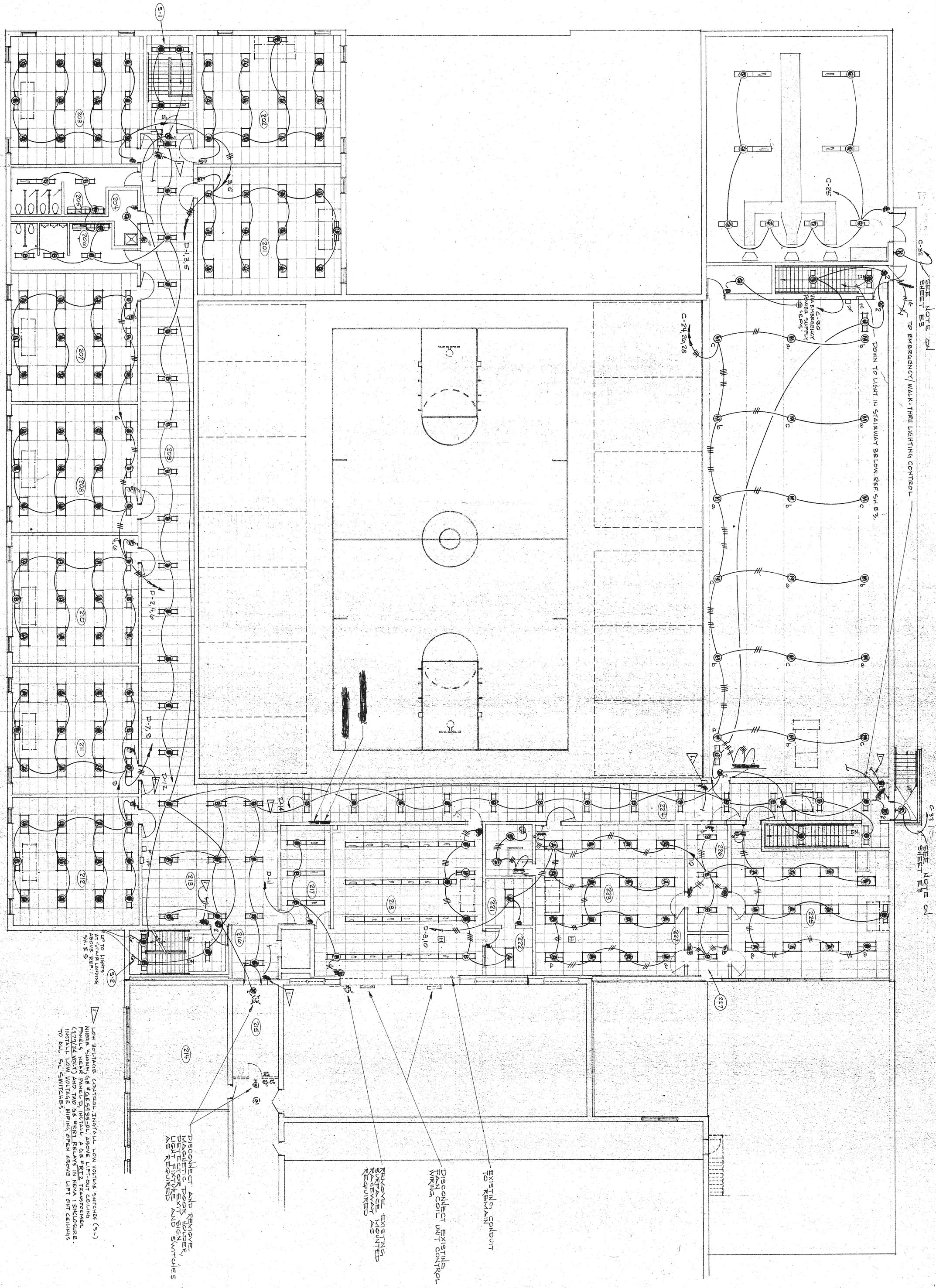

SECOND FLOOR PLAN

SCALE 1/8" = 1'-0"

DESIGN	RLA
DRAWN	WDB
DATE	SEPT. 1979
FILE NO.	78-508
SHEET NO.	E-4

RODNEY L. ANDERSON LICENSED 6786 KANSAS PROFESSIONAL ENGINEER

ADDITION TO HIGH SCHOOL
UNIFIED SCHOOL DISTRICT #320
WAMEGO, KANSAS

SECOND FLOOR PLAN
LIGHTING

WILSON & COMPANY
SALINA KANSAS

REVISION	DATE	BY

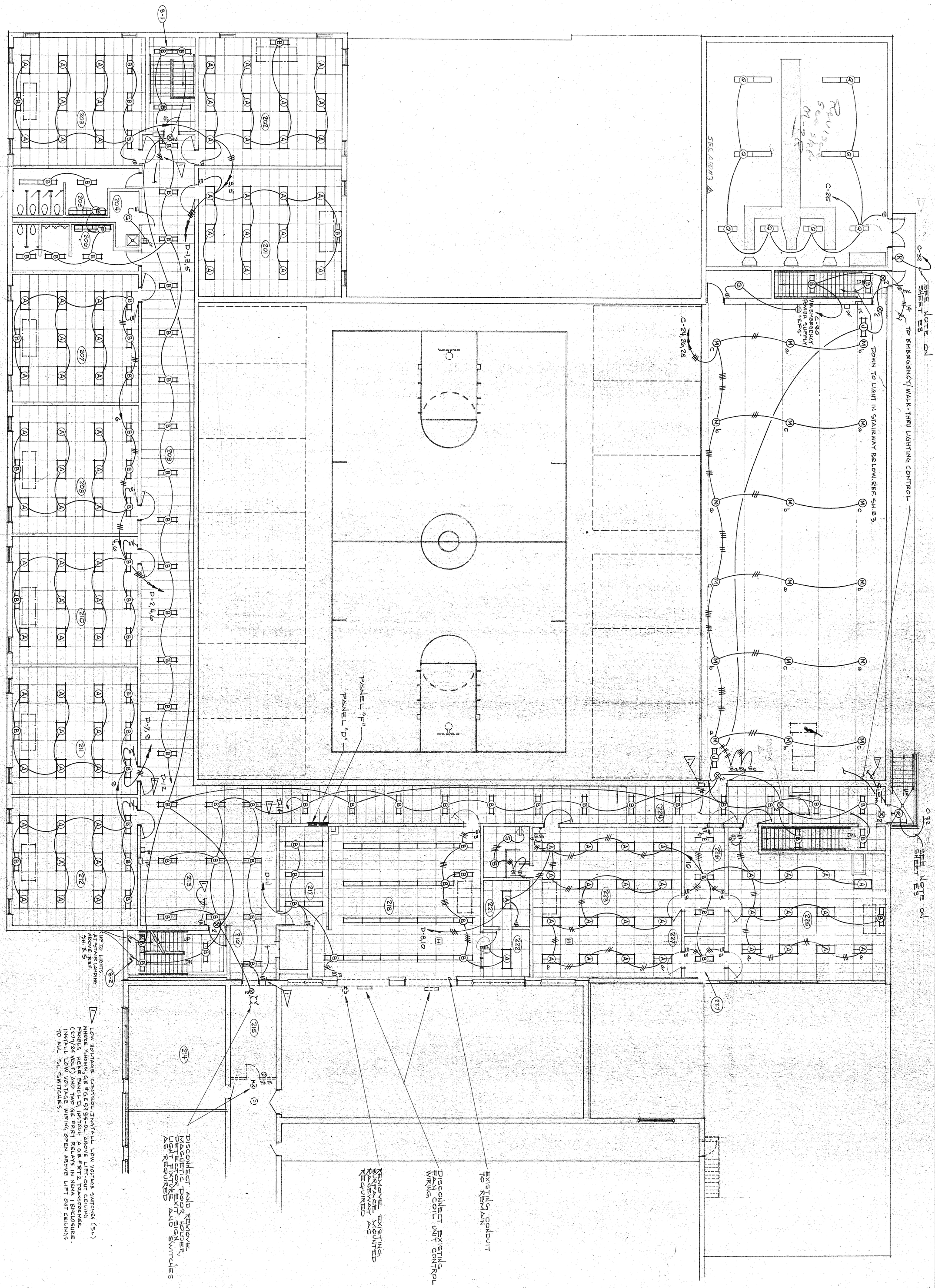

SECOND FLOOR PLAN

SCALE 1/8" = 1'-0"

ADDITION TO HIGH SCHOOL

UNIFIED SCHOOL DISTRICT #320

WAMEGO, KANSAS

SECOND FLOOR PLAN
LIGHTING

RODNEY L ANDERSON LICENSED 6786 KANSAS PROFESSIONAL ENGINEER

DESIGN	RLA
DRAWN	WDB
DATE	SEPT. 1979
FILE NO.	78-508
SHEET NO.	E-4

WILSON & COMPANY

SALINA KANSAS

REVISION | DA

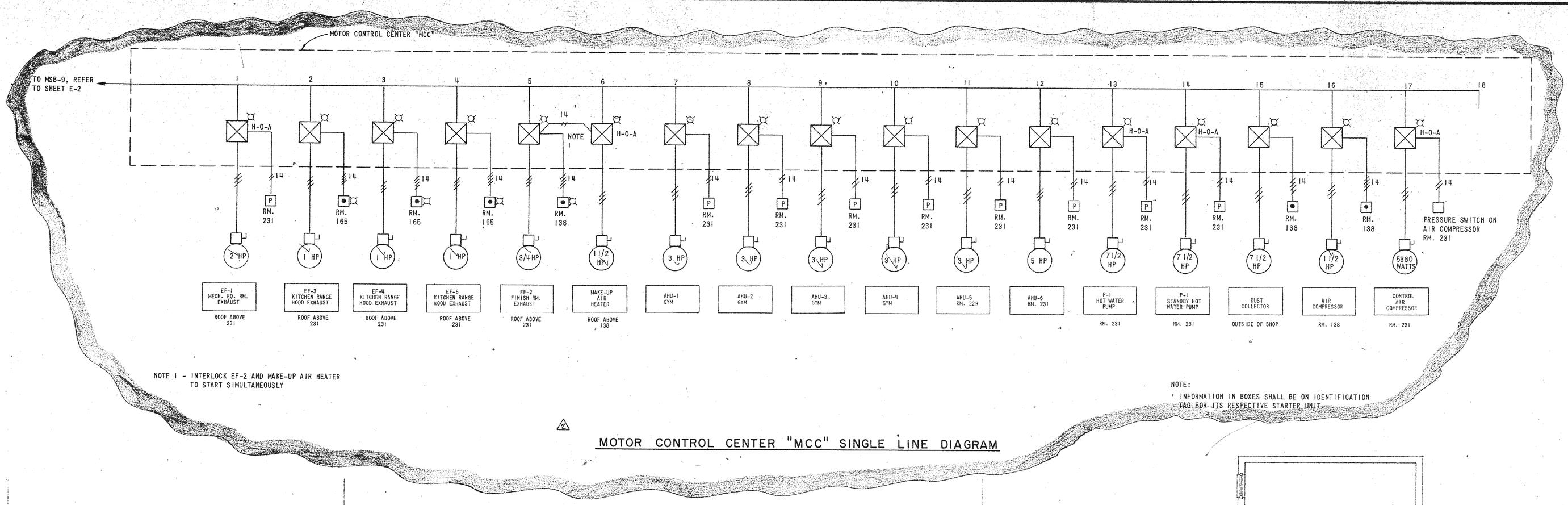

NOTE 1 - INTERLOCK EF-2 AND MAKE-UP AIR HEATER TO START SIMULTANEOUSLY

NOTE:
' INFORMATION IN BOXES SHALL BE ON IDENTIFICATION TAG FOR ITS RESPECTIVE STARTER UNIT.

MOTOR CONTROL CENTER "MCC" SINGLE LINE DIAGRAM

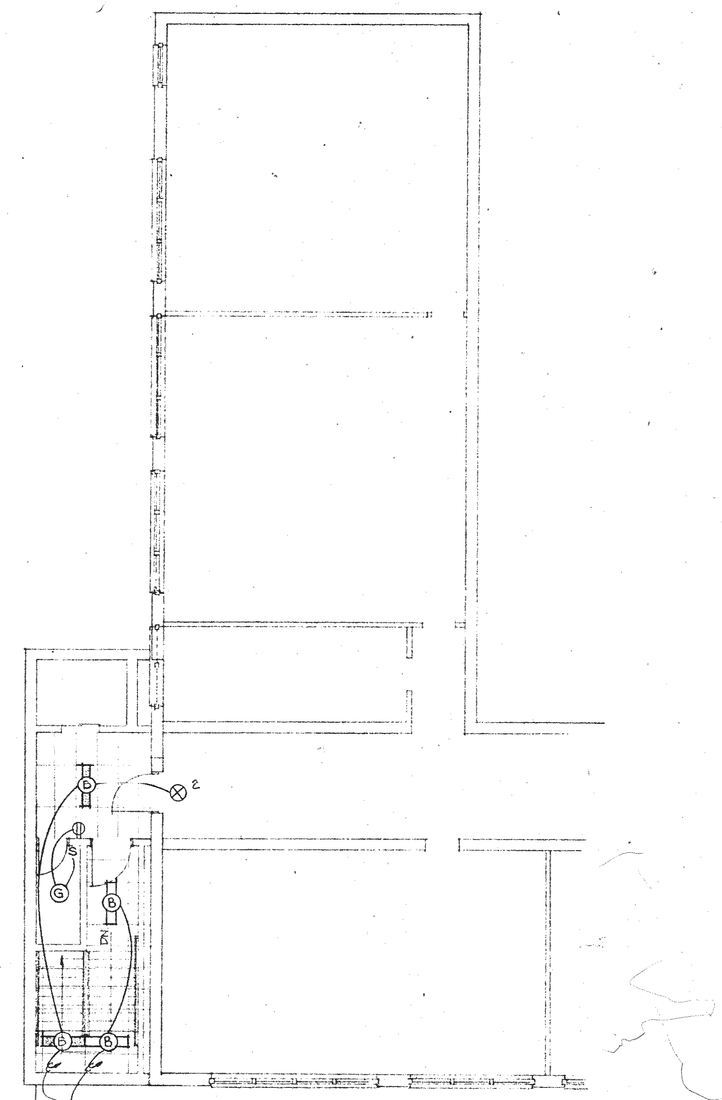

REFER TO SHEETS A-4, E-6, E-7 AND E-8 FOR ROOF-MOUNTED EQUIPMENT REQUIRING ELECTRICAL WORK.

ROOF PLAN & THIRD FLOOR PLAN

BY	DATE	REVISION
MRB	28/9/79	ADDENDUM NO. 2

WILSON & COMPANY
SALINA KANSAS

ADDITION TO HIGH SCHOOL
UNIFIED SCHOOL DISTRICT #320
WAMEGO, KANSAS
ROOF PLAN AND THIRD FLOOR PLAN
LIGHTING AND POWER

RODNEY L. ANDERSON 6785 REGISTERED KANSAS PROFESSIONAL ENGINEER

DESIGN	RLA
DRAWN	WDB
DATE	SEPT. 1979
FILE NO.	78-508
SHEET NO.	E-5

ROOF PLAN & THIRD FLOOR PLAN

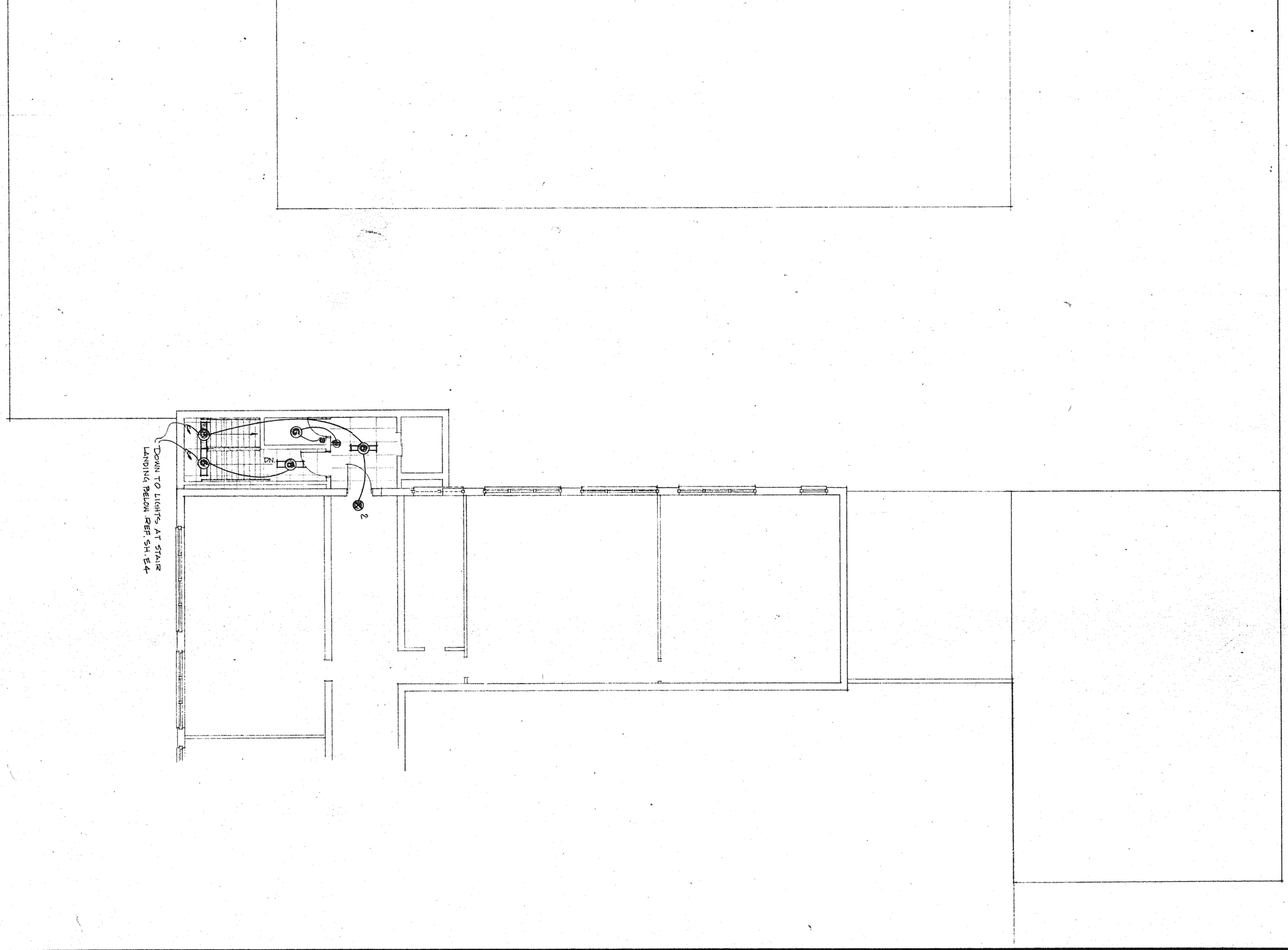

DESIGN RLA
DRAWN WDB
DATE SEPT. 1979
FILE NO. 78-50B
SHEET NO. E-5

RODNEY L. ANDERSON LICENSED 6786 KANSAS PROFESSIONAL ENGINEER

ADDITION TO HIGH SCHOOL
UNIFIED SCHOOL DISTRICT #320
WAMEGO, KANSAS
ROOF PLAN AND THIRD FLOOR PLAN
LIGHTING AND POWER

WILSON & COMPANY
SALINA KANSAS

REVISION	DATE	BY

FOR ELECTRICAL WORK SEE KITCHEN FLOOR PLAN SHEET E6

EF-14 ON ROOF

EF-15 ON ROOF

PANEL "H"

PANEL "C"

WALL BOX (SCOREBOARD CONTROL)

1" C. BELOW FLOOR. STUB OUT ABOVE CEILING. (FUTURE TELEPHONE INSTALLATION)

1½" C. BELOW FLOOR

FUTURE TELEPHONE OUTLET

(4) ¾" C. BELOW FLOOR. STUB OUT AT ROOF JOISTS FOR FUTURE EQUIPMENT INSTALLATION. (1) FUTURE ELECTRIC OPERATED GOALS AND (1) FUTURE ELECTRIC OPERATED CURTAIN DIVIDER

OUTLET BOX, 124'-8" TOP OF BOX (SCOREBOARD CONTROL)

124'-8" TOP OF BOX

(3) ¾" C. BELOW FLOOR. STUB OUT AT ROOF JOISTS FOR FUTURE EQUIPMENT INSTALLATION. (3) FUTURE ELECTRIC OPERATED GOALS.

OUTLET BOX, 124'-8" TOP OF BOX (SCOREBOARD CONTROL)

124'-8" TOP OF BOX

TRANSFORMER

PANEL "E"

PANEL "G"

UP TO EF-10 ON ROOF

½" EMPTY CONDUIT TO PANEL "C"

1" EMPTY CONDUIT

PROVIDE STARTER WITH COVER MOUNTED START-STOP PUSHBUTTON STATION AND INTERLOCK MAKE-UP AIR HEATER TO RUN WHEN EF-2 IS RUNNING

DUST COLLECTOR

NOTE: ALL OUTLETS TO BE MOUNTED AT 48" IN ROOM 138

MAKE-UP AIR HEATER ON ROOF

PANEL "J"

TRANSFORMER "T2"

AIR COMPRESSOR 1½ HP @ 230V, 3 Ø

ELEVATOR CONTROLLER

ELEVATOR PUMP UNIT

SHOP EQUIPMENT (N.I.C.)	
(1)	DISC SANDER 1 1/2 HP, 115V
(2)	GRINDER 3/4 HP, 115V
(3)	MITER BOX 2 HP, 115V
(4)	BAND SAW 1 HP, 115V
(5)	WOOD LATHE 1 HP, 115V
(6)	DRILL PRESS 1/2 HP, 115V
(7)	RADIAL ARM SAW 2 HP, 115V
(8)	TABLE SAW 3 HP, 230V
(9)	JOINTER 1 1/2 HP, 230V

SHOP EQUIPMENT BASE BID	
(10)	CORD REEL, SEE DETAIL SHEET E2

See C.O. Proj. E-6R

GROUND FLOOR PLAN
SCALE 1/8" = 1'-0"

REVISION

WILSON # COMPANY

ADDITION TO HIGH SCHOOL
UNIFIED SCHOOL DISTRICT #320
WAMEGO, KANSAS
GROUND FLOOR PLAN
POWER

RODNEY L. ANDERSON 6705 REGISTERED ELECTRICAL ENGINEER

DESIGN	RLA
DRAWN	WDB
DATE	SEPT. 1979
FILE NO.	78-508
SHEET NO.	E-6

GROUND FLOOR PLAN

SCALE 1/8" = 1'-0"

CHANGE ORDER NO. 1 DRAWING DENOTING A NEW GYMNASIUM SOUND SYSTEM. SEE ATTACHED SPECIFICATION. 10-31-79

DESIGN	R.L.A.
DRAWN	W.D.B.
DATE	SEPT. 1979
FILE NO.	78-508
SHEET NO.	E-6R

RODNEY L. ANDERSON LICENSED 6786 KANSAS PROFESSIONAL ENGINEER

ADDITION TO HIGH SCHOOL
UNIFIED SCHOOL DISTRICT #320
WAMEGO, KANSAS
GROUND FLOOR PLAN
POWER

WILSON & COMPANY

REVISION	DATE	BY
2 ADDENDUM NO. 2	28/9/79	MRE

SHOP EQUIPMENT (N.I.C.)

1. PISE SANDER 1 1/2 HP, 115V
2. GRINDER 3/4 HP, 115V
3. MITER BOX 2 HP, 115V
4. BAND SAW 1 HP, 115V
5. WOOD LATHE 1 HP, 115V
6. DRILL PRESS 1/2 HP, 115V
7. RADIAL ARM SAW 2 HP, 115V
8. TABLE SAW 3 HP, 230V
9. JOINTER 1 1/2 HP, 230V

SHOP EQUIPMENT BASE BID

10. CORD REEL, SEE DETAIL SHEET E2

NOTE: ALL OUTLETS TO BE MOUNTED AT 48" IN ROOM 138

SHOP EQUIPMENT (N.I.C.)	
1	DISC SANDER 1 1/2 HP, 115V
2	GRINDER 3/4 HP, 115V
3	MITER BOX 2 HP, 115V
4	BAND SAW 1 HP, 115V
5	WOOD LATHE 1 HP, 115V
6	DRILL PRESS 1/2 HP, 115V
7	RADIAL ARM SAW 2 HP, 115V
8	TABLE SAW 3 HP, 230V
9	JOINTER 1 1/2 HP, 230V

SHOP EQUIPMENT BASE BID	
10	CORD REEL, SEE DETAIL SHEET E2

NO.	REVISION	DATE	BY
2	ADDENDUM NO. 2	2/9/79	MRE

WILSON & COMPANY

ADDITION TO HIGH SCHOOL
UNIFIED SCHOOL DISTRICT #320
WAMEGO, KANSAS
GROUND FLOOR PLAN
POWER

ROBERT L. ANDERSON 6756 REGISTERED PROFESSIONAL ENGINEER STATE OF KANSAS

DESIGN	RLA
DRAWN	WDB
DATE	SEPT. 1979
FILE NO.	78-508
SHEET NO.	E-6

GROUND FLOOR PLAN
SCALE: 1/8" = 1'-0"

FOR ELECTRICAL WORK SEE KITCHEN FLOOR PLAN SHEET E6

1½" EMPTY CONDUIT TO PANEL "C"

1" EMPTY CONDUIT

PROVIDE STARTER WITH COVER MOUNTED START-STOP PUSHBUTTON STATION AND INTERLOCK MAKE-UP AIR HEATER TO RUN WHEN EF-2 IS RUNNING

DUST COLLECTOR

NOTE: ALL OUTLES TO BE MOUNTED AT 48" IN ROOM 138

MAKE-UP AIR HEATER ON ROOF

EF-14 ROOF

EF-15 ROOF

PANEL "H"

PANEL "C"

MSB-13

TRANSFORMER

AIR COMPRESSOR 1½ HP @ 460V, 3 ø

WALL BOX (SCOREBOARD CONTROL)

FUTURE TELEPHONE OUTLET

1" C. BELOW FLOOR. STUB OUT ABOVE CEILING. (FUTURE TELEPHONE INSTALLATION)

1½" C. BELOW FLOOR

(4) ¾" C. BELOW FLOOR. STUB OUT AT ROOF JOISTS FOR FUTURE EQUIPMENT INSTALLATION. (3) FUTURE ELECTRIC OPERATED GOALS AND (1) FUTURE ELECTRIC OPERATED CURTAIN DIVIDER.

OUTLET BOX, 124'-8" TOP OF BOX (SCOREBOARD CONTROL)

124'-8" TOP OF BOX

(2) ¾" C. BELOW FLOOR. STUB OUT AT ROOF JOISTS FOR FUTURE EQUIPMENT INSTALLATION. (2) FUTURE ELECTRIC OPERATED GOALS.

OUTLET BOX, 124'-8" TOP OF BOX (SCOREBOARD CONTROL)

124'-8" TOP OF BOX

TRANSFORMER

UP TO EF-10 ON ROOF

ELEVATOR CONTROLLER

ELEVATOR PUMP UNIT

EF-9

SHOP EQUIPMENT (N.I.C.)	
1	DISC SANDER 1 1/2 HP, 115V
2	GRINDER 3/4 HP, 115V
3	MITER BOX 2 HP, 115V
4	BAND SAW 1 HP, 115V
5	WOOD LATHE 1 HP, 115V
6	DRILL PRESS 1/2 HP, 115V
7	RADIAL ARM SAW 2 HP, 115V
8	TABLE SAW 3 HP, 230V
9	JOINTER 1 1/2 HP, 230V

SHOP EQUIPMENT BASE BID	
10	CORD REEL, SEE DETAIL SHEET E2

GROUND FLOOR PLAN

SCALE 1/8" = 1'-0"

REVISION	DATE	BY

WILSON & COMPANY

ADDITION TO HIGH SCHOOL
UNIFIED SCHOOL DISTRICT #320
WAMEGO, KANSAS
GROUND FLOOR PLAN
POWER

ROBERT L. ANDERSON 6795 REGISTERED ENGINEER STATE OF KANSAS

DESIGN	RLA
DRAWN	WDB
DATE	SEPT. 1979
FILE NO.	78-508
SHEET NO.	E-6

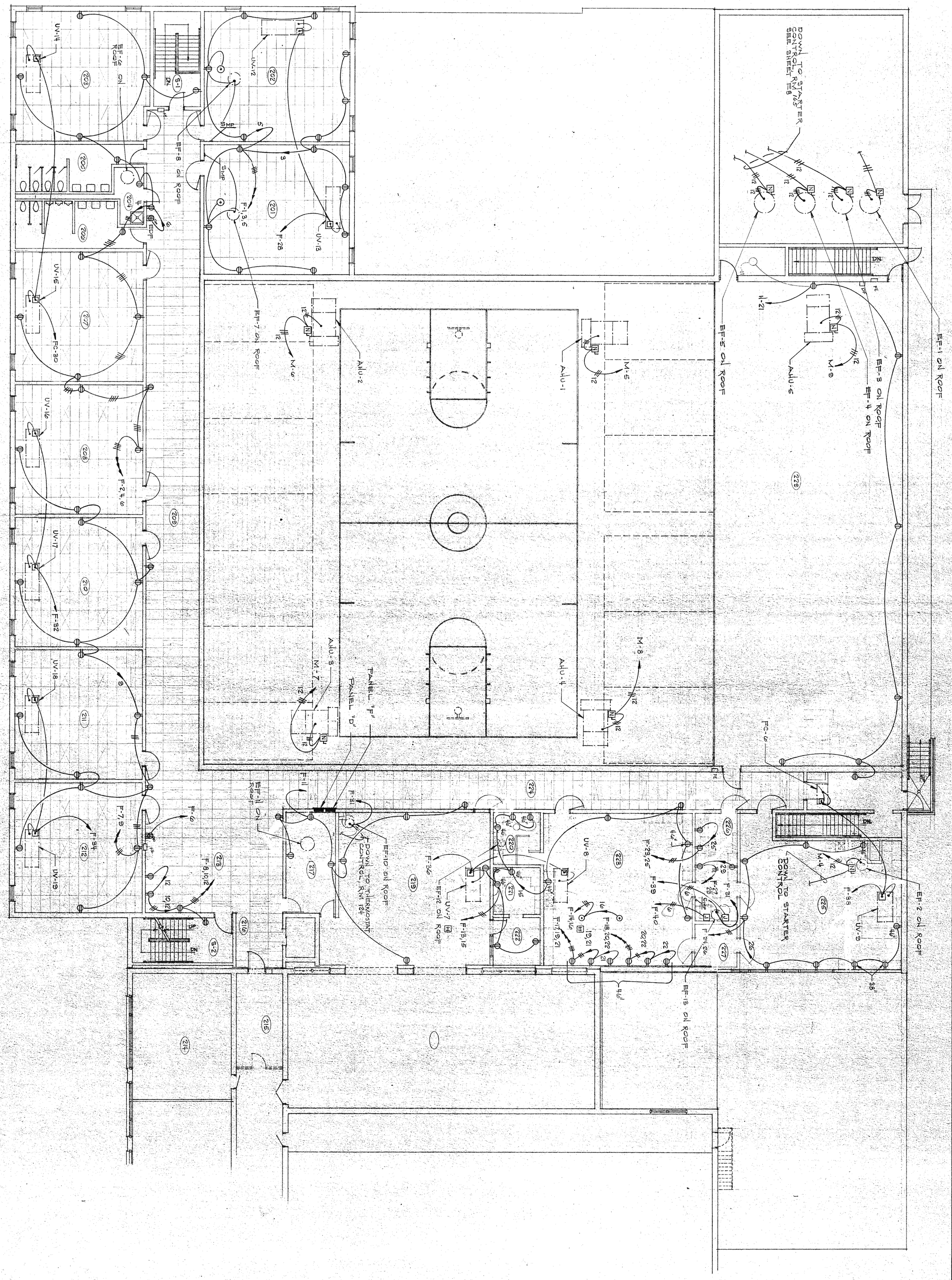

SECOND FLOOR PLAN
SCALE 1/8" = 1'-0"

DESIGN	RLA
DRAWN	WDB
DATE	SEPT. 1979
FILE NO.	78-50B
SHEET NO.	E-7

RODNEY L. ANDERSON LICENSED 6786 KANSAS PROFESSIONAL ENGINEER

ADDITION TO HIGH SCHOOL
UNIFIED SCHOOL DISTRICT #320
WAMEGO, KANSAS
SECOND FLOOR PLAN
POWER

WILSON & COMPANY
SALINA KANSAS

REVISION

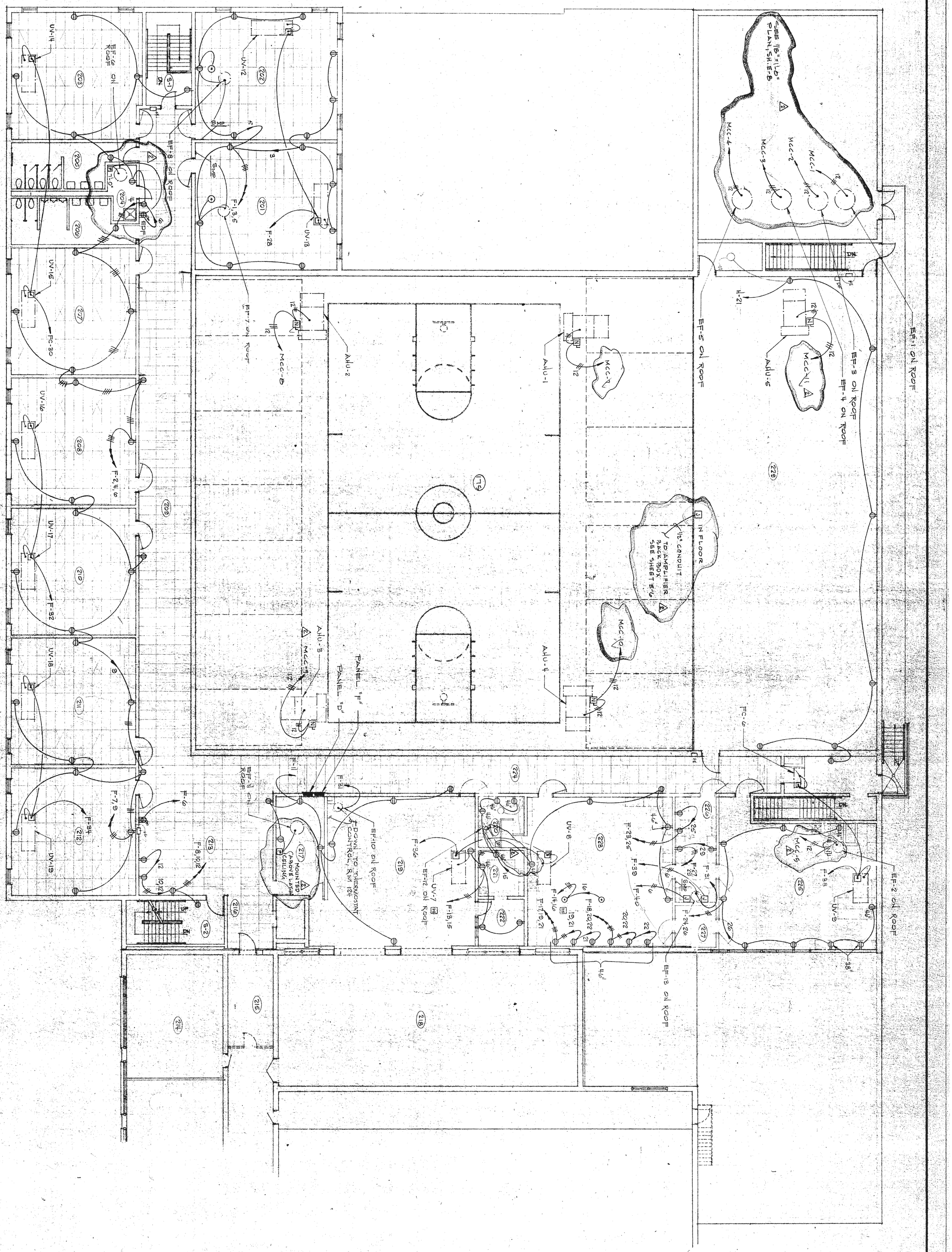

SECOND FLOOR PLAN

SCALE 1/8" = 1'-0"

ADDITION TO HIGH SCHOOL

UNIFIED SCHOOL DISTRICT #320

WAMEGO, KANSAS

SECOND FLOOR PLAN
POWER

RODNEY L. ANDERSON LICENSED 6786 KANSAS PROFESSIONAL ENGINEER

DESIGN	RLA
DRAWN	WDB
DATE	SEPT 1979
FILE NO.	78-508
SHEET NO.	E-7

WILSON & COMPANY

SALINA KANSAS

ADDENDUM 1

REVISION

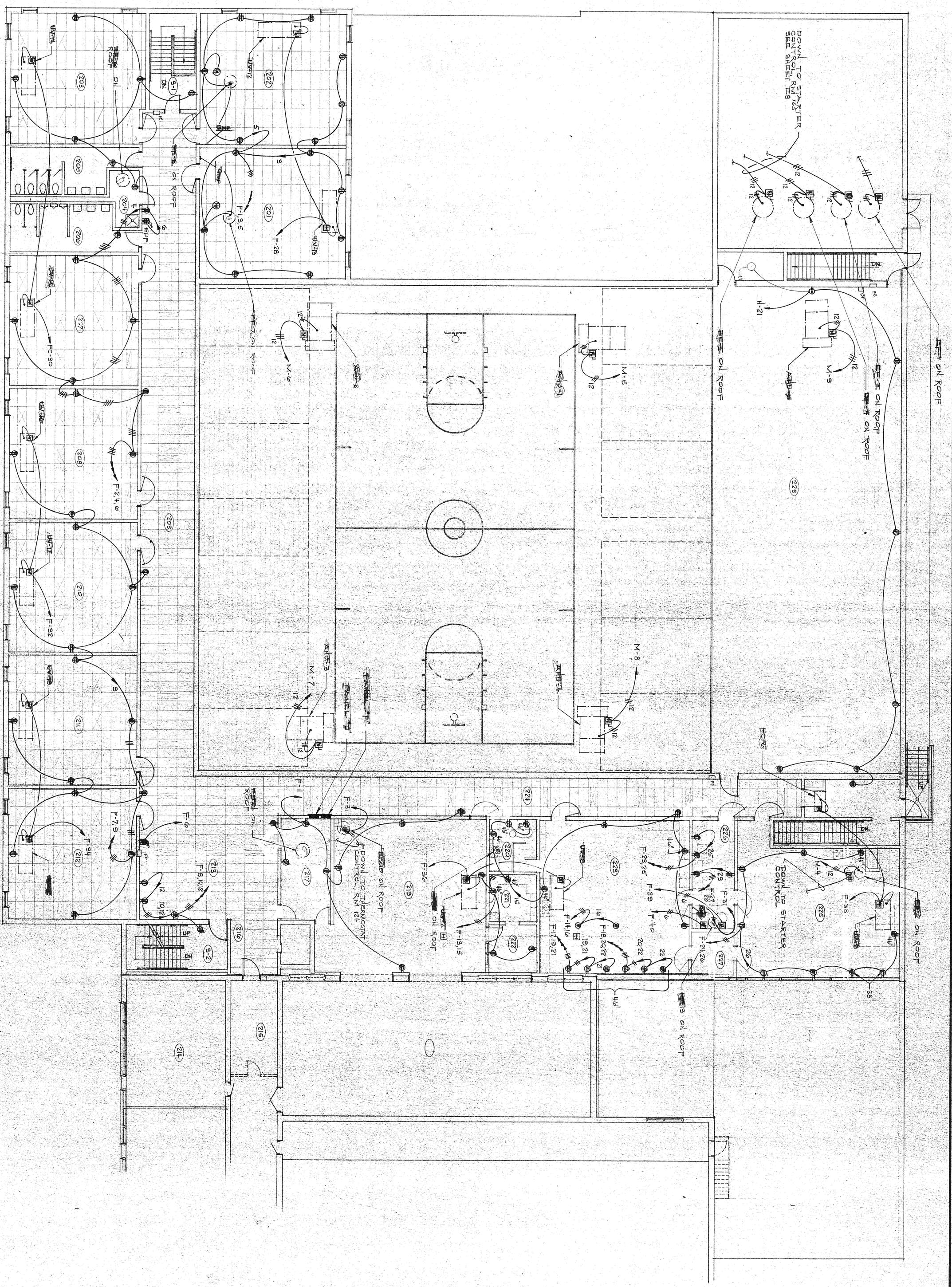

SECOND FLOOR PLAN

SCALE 1/8" = 1'-0"

DESIGN	RLA
DRAWN	WDB
DATE	SEPT. 1979
FILE NO.	78-508
SHEET NO.	E-7

RODNEY L. ANDERSON LICENSED 6786 KANSAS PROFESSIONAL ENGINEER

ADDITION TO HIGH SCHOOL
UNIFIED SCHOOL DISTRICT #320
WAMEGO, KANSAS
SECOND FLOOR PLAN
POWER

WILSON & COMPANY

SALINA KANSAS

REVISION	DATE	BY

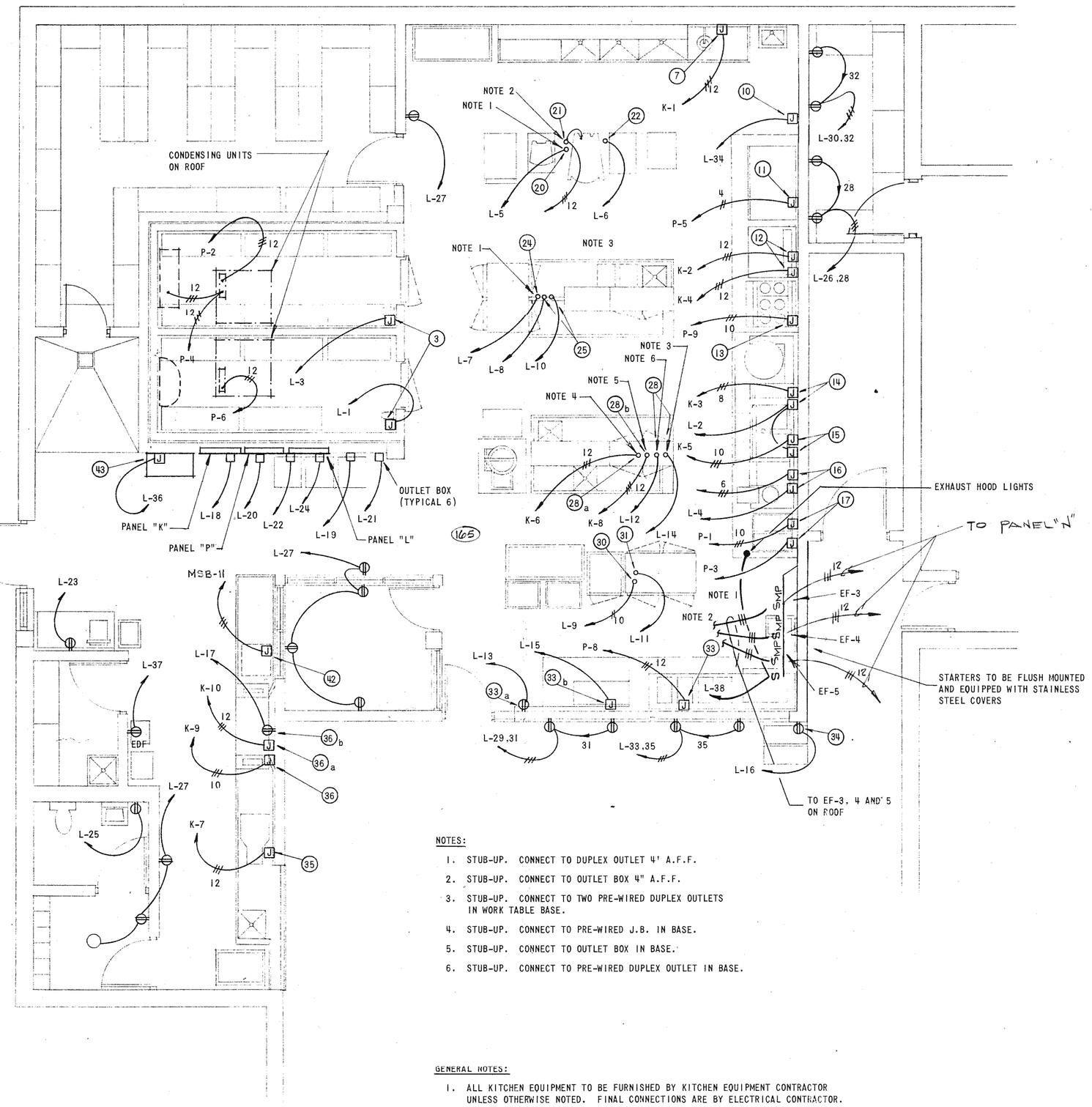

NOTES:

1. STUB-UP. CONNECT TO DUPLEX OUTLET 4' A.F.F.
2. STUB-UP. CONNECT TO OUTLET BOX 4" A.F.F.
3. STUB-UP. CONNECT TO TWO PRE-WIRED DUPLEX OUTLETS IN WORK TABLE BASE.
4. STUB-UP. CONNECT TO PRE-WIRED J.B. IN BASE.
5. STUB-UP. CONNECT TO OUTLET BOX IN BASE.
6. STUB-UP. CONNECT TO PRE-WIRED DUPLEX OUTLET IN BASE.

GENERAL NOTES:

1. ALL KITCHEN EQUIPMENT TO BE FURNISHED BY KITCHEN EQUIPMENT CONTRACTOR UNLESS OTHERWISE NOTED. FINAL CONNECTIONS ARE BY ELECTRICAL CONTRACTOR. EXACT LOCATIONS AND CONNECTIONS TO BE VERIFIED WITH KITCHEN EQUIPMENT CONTRACTOR.
2. FOR KITCHEN EQUIPMENT CONTRACTOR'S LAYOUT PLAN AND EQUIPMENT SCHEDULE SEE SHEET NO. KE-1 AND KE-2.

KITCHEN FLOOR PLAN - POWER

1/4" = 1'-0"

KITCHEN EQUIPMENT ITEMS

(3) REFRIGERATOR/FREEZER, 120V, 60, 1ø
(7) DISPOSER, (UTENSIL SINK), 480V, 60, 3ø
(10) FIRE PROTECTION, 120V, 60, 1ø
(11) STACK OVEN, 208V, 60, 3ø
(12) CONVECTION OVEN, 480V, 60, 3ø
(13) RANGE, 208V, 60, 3ø
(14) KETTLE, 480V, 60, 3ø AND 120V, 60, 1ø
(15) FRY PAN, 480V, 60, 3ø AND 120V, 60, 1ø
(16) KETTLE AND STEAMER, 480V, 60, 3ø AND 120V, 60, 1ø
(17) FRYER, 208V, 60, 3ø
(20) MIXER, 120V, 60, 1ø
(21) MIXER, 208V, 60, 3ø
(22) PROOF CABINET, 120V, 60, 1ø
(24) REFRIGERATOR, 120V, 60, 1ø
(25) WORK TABLE, 120V, 60, 1ø
(28a) DISPOSER, (WORK TABLE) 480V, 60, 3ø
(28b) CUTTER/MIXER, (WORK TABLE) 480V, 60, 3ø
(28) WORK TABLE, 120V, 60, 1ø
(30) PORTABLE HOT CABINET, 120V, 60, 1ø
(31) REFRIGERATOR, 120V, 60, 1ø
(33) HOT FOOD UNIT, 208V, 60, 3ø
(33a) SERVING COUNTER, 120V, 60, 1ø
(33b) SERVING COUNTER LIGHTS, 120V, 60, 1ø
(34) PORTABLE MILK CABINET, 120V, 60, 1ø
(35) DISPOSER, (DISH TABLE) 480V, 60, 3ø
(36) TANK HEAT, (DISH WASHER) 480V, 60, 3ø
(36a) MOTORS AND CONTROLS, (DISH WASHER) 480V, 60, 3ø
(36b) DETERGENT DISPENSER, (DISH WASHER) 120V, 60, 1ø
(40) TRANSPORT CARTS, 120V, 60, 1ø
(42) BOOSTER HEATER, 480V, 60, 3ø
(43) ICE MACHINE, 120V, 60, 1ø

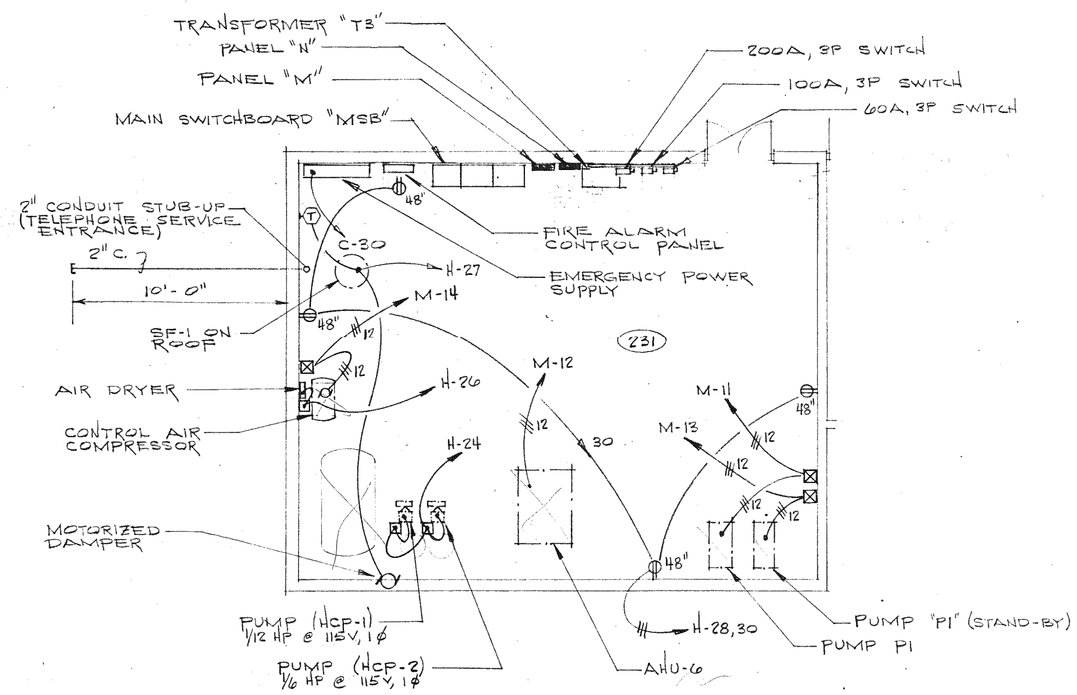

EQUIPMENT ROOM PLAN ~ POWER

SCALE 1/4" = 1'-0"

WILSON & COMPANY
SALINA KANSAS

REVISION

ADDITION TO HIGH SCHOOL
UNIFIED SCHOOL DISTRICT #320
WAMEGO, KANSAS
KITCHEN PLAN

DESIGN	WDB
DRAWN	KEY
DATE	SEPT. 1979
FILE NO.	78-508
SHEET NO.	E-8

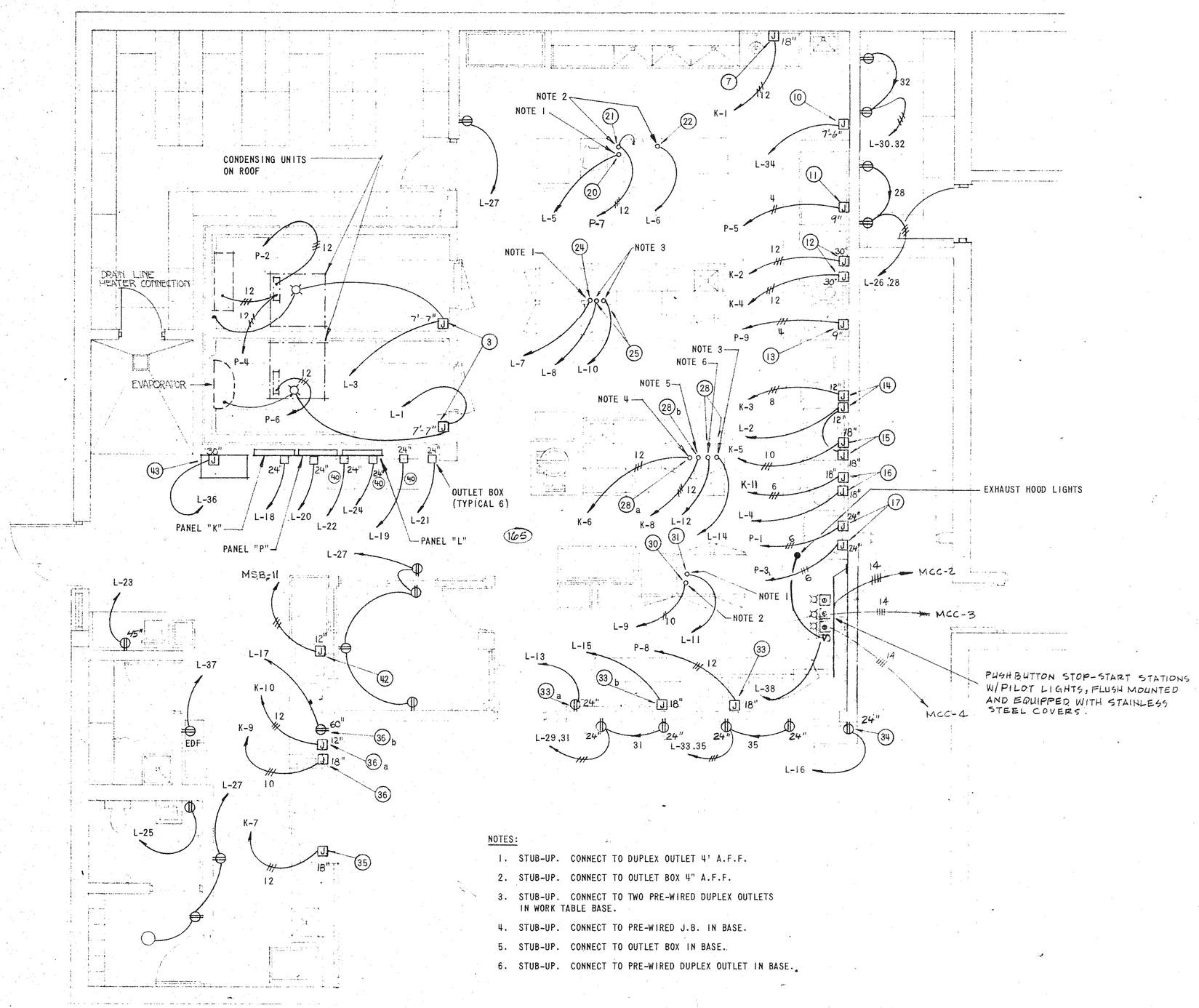

NOTES:

1. STUB-UP. CONNECT TO DUPLEX OUTLET 4' A.F.F.
2. STUB-UP. CONNECT TO OUTLET BOX 4" A.F.F.
3. STUB-UP. CONNECT TO TWO PRE-WIRED DUPLEX OUTLETS IN WORK TABLE BASE.
4. STUB-UP. CONNECT TO PRE-WIRED J.B. IN BASE.
5. STUB-UP. CONNECT TO OUTLET BOX IN BASE.
6. STUB-UP. CONNECT TO PRE-WIRED DUPLEX OUTLET IN BASE.

GENERAL NOTES:

1. ALL KITCHEN EQUIPMENT TO BE FURNISHED BY KITCHEN EQUIPMENT CONTRACTOR UNLESS OTHERWISE NOTED. FINAL CONNECTIONS ARE BY ELECTRICAL CONTRACTOR. EXACT LOCATIONS AND CONNECTIONS TO BE VERIFIED WITH KITCHEN EQUIPMENT CONTRACTOR.
2. FOR KITCHEN EQUIPMENT CONTRACTOR'S LAYOUT PLAN AND EQUIPMENT SCHEDULE SEE SHEET NO. KE-1 AND KE-2.

2 KITCHEN FLOOR PLAN - POWER

1/4" = 1'-0"

KITCHEN EQUIPMENT ITEMS

(3)	REFRIGERATOR/FREEZER, 120V, 60, 1ø
(7)	DISPOSER, (UTENSIL SINK), 480V, 60, 3ø
(10)	FIRE PROTECTION, 120V, 60, 1ø
(11)	STACK OVEN, 208V, 60, 3ø
(12)	CONVECTION OVEN, 480V, 60, 3ø
(13)	RANGE, 208V, 60, 3ø
(14)	KETTLE, 480V, 60, 3ø AND 120V, 60, 1ø
(15)	FRY PAN, 480V, 60, 3ø AND 120V, 60, 1ø
(16)	KETTLE AND STEAMER, 480V, 60, 3ø AND 120V, 60, 1ø
(17)	FRYER, 208V, 60, 3ø
(20)	MIXER, 120V, 60, 1ø
(21)	MIXER, 208V, 60, 3ø
(22)	PROOF CABINET, 120V, 60, 1ø
(24)	REFRIGERATOR, 120V, 60, 1ø
(25)	WORK TABLE, 120V, 60, 1ø
(28a)	DISPOSER, (WORK TABLE) 480V, 60, 3ø
(28b)	CUTTER/MIXER, (WORK TABLE) 480V, 60, 3ø
(28)	WORK TABLE, 120V, 60, 1ø
(30)	PORTABLE HOT CABINET, 120V, 60, 1ø
(31)	REFRIGERATOR, 120V, 60, 1ø
(33)	HOT FOOD UNIT, 208V, 60, 3ø
(33a)	SERVING COUNTER, 120V, 60, 1ø
(33b)	SERVING COUNTER LIGHTS, 120V, 60, 1ø
(34)	PORTABLE MILK CABINET, 120V, 60, 1ø
(35)	DISPOSER, (DISH TABLE) 480V, 60, 3ø
(36)	TANK HEAT, (DISH WASHER) 480V, 60, 3ø
(36a)	MOTORS AND CONTROLS, (DISH WASHER) 480V, 60, 3ø
(36b)	DETERGENT DISPENSER, (DISH WASHER) 120V, 60, 1ø
(40)	TRANSPORT CARTS, 120V, 60, 1ø
(42)	BOOSTER HEATER, 480V, 60, 3ø
(43)	ICE MACHINE, 120V, 60, 1ø

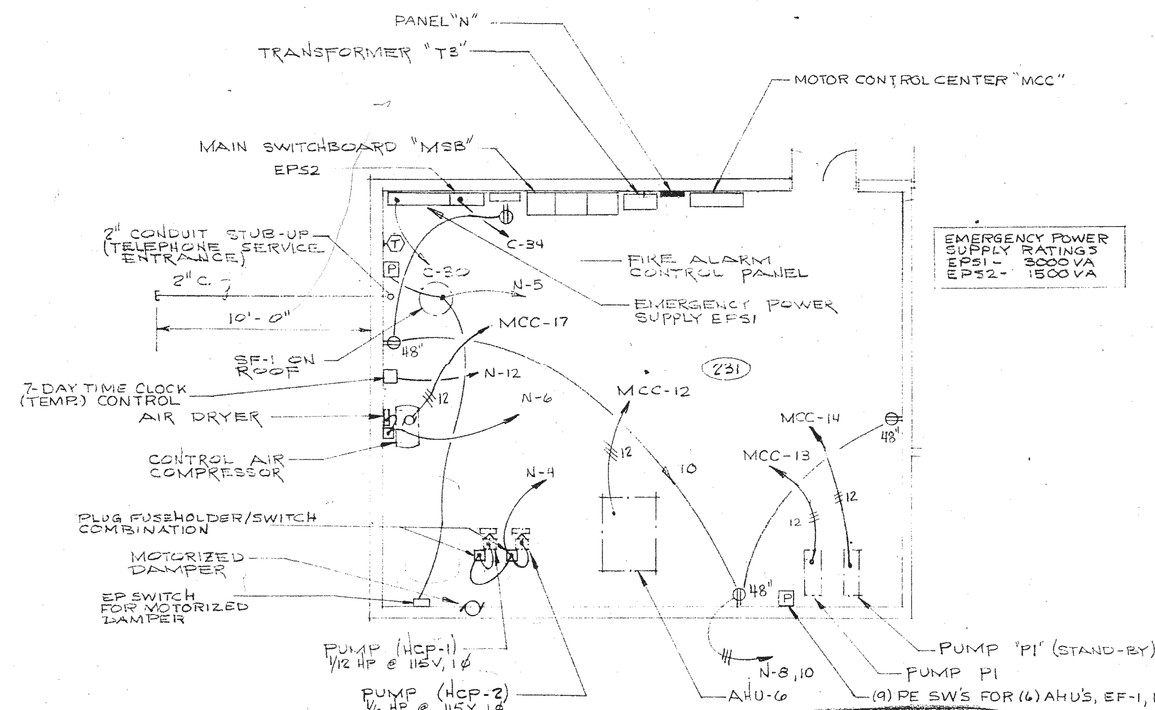

2 EQUIPMENT ROOM PLAN ~ POWER

SCALE 1/8" = 1'-0"

ADDENDUM NO. 2 REVISION

WILSON & COMPANY
SALINA KANSAS

ADDITION TO HIGH SCHOOL
UNIFIED SCHOOL DISTRICT #320
WAMEGO, KANSAS
KITCHEN PLAN

ROBERT C. ANDERSON 5705 REGISTERED PROFESSIONAL ENGINEER

DESIGN	WDB
DRAWN	KEY
DATE	SEPT. 1979
FILE NO.	78-508
SHEET NO.	E-8

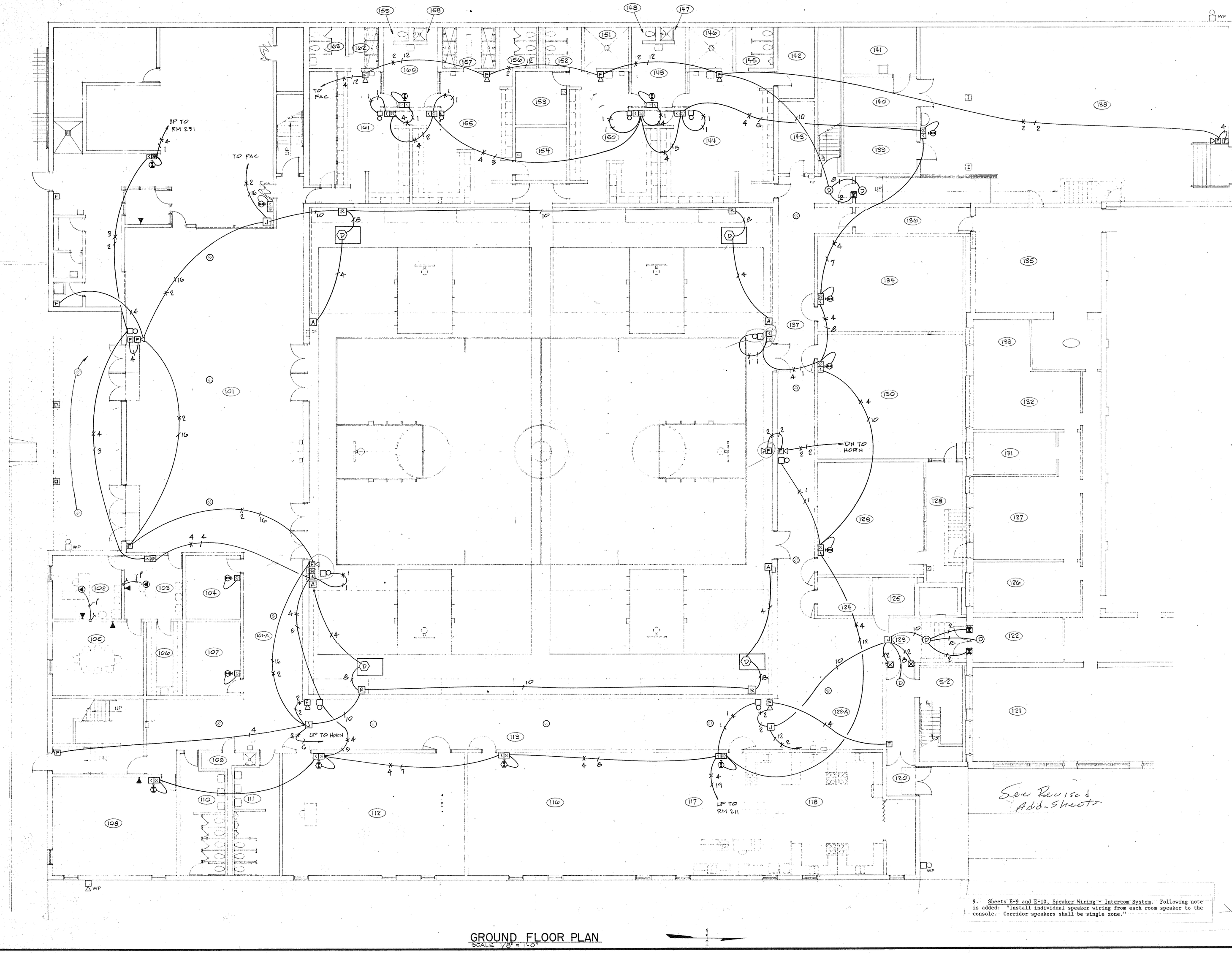

GROUND FLOOR PLAN
SCALE 1/8" = 1'-0"

9. Sheets E-9 and E-10, Speaker Wiring - Intercom System. Following note is added: "Install individual speaker wiring from each room speaker to the console. Corridor speakers shall be single zone."

See Revised Add. Sheets

REVISION

WILSON & COMPANY

ADDITION TO HIGH SCHOOL
UNIFIED SCHOOL DISTRICT #320
WAMEGO, KANSAS
GROUND FLOOR PLAN
FIRE ALARM AND COMMUNICATIONS SYSTEM

ROBERT L. ANDERSON 6706 REGISTERED PROFESSIONAL ENGINEER KANSAS

DESIGN	RLA
DRAWN	WDB
DATE	SEPT. 1979
FILE NO.	78-508
SHEET NO.	E-9

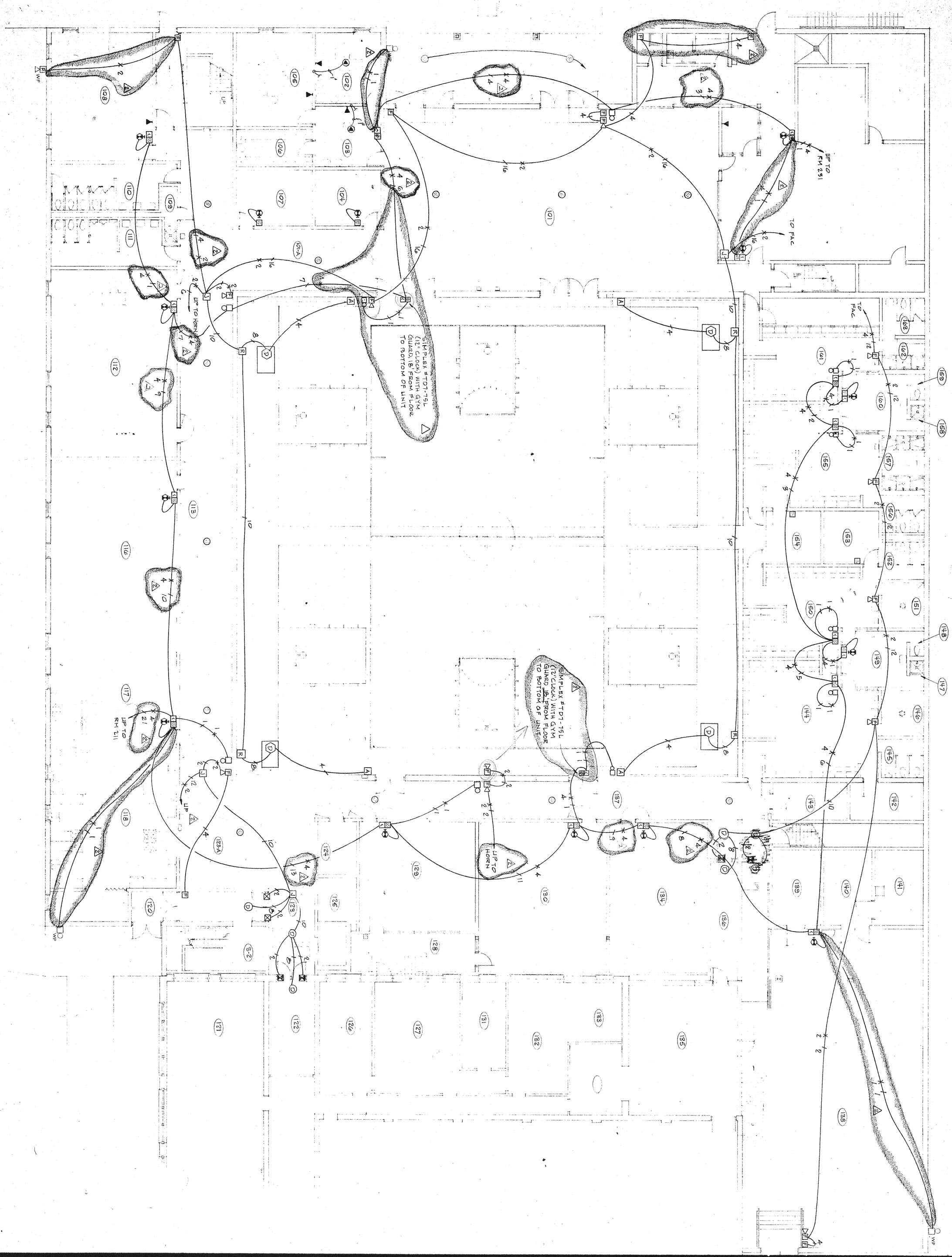

GROUND FLOOR PLAN
SCALE: 1/8" = 1'-0"

DESIGN RLA
DRAWN WDB
DATE SEPT. 1979
FILE NO. 78-508
SHEET NO. E-9

RODNEY L. ANDERSON LICENSED 6786 KANSAS PROFESSIONAL ENGINEER

ADDITION TO HIGH SCHOOL
UNIFIED SCHOOL DISTRICT #320
WAMEGO, KANSAS
GROUND FLOOR PLAN
FIRE ALARM AND COMMUNICATIONS SYSTEM

WILSON & COMPANY

REVISION	DATE	BY
2 ADDENDUM NO. 2	28/9/79	MRE

GROUND FLOOR PLAN
SCALE 1/8" = 1'-0"

ADDITION TO HIGH SCHOOL
UNIFIED SCHOOL DISTRICT #320
WAMEGO, KANSAS
GROUND FLOOR PLAN
FIRE ALARM AND COMMUNICATIONS SYSTEM

RODNEY L. ANDERSON LICENSED 6786 KANSAS PROFESSIONAL ENGINEER

WILSON & COMPANY

DESIGN	RLA
DRAWN	WDB
DATE	SEPT. 1979
FILE NO.	78-508
SHEET NO.	E-9

REVISION	DATE	BY

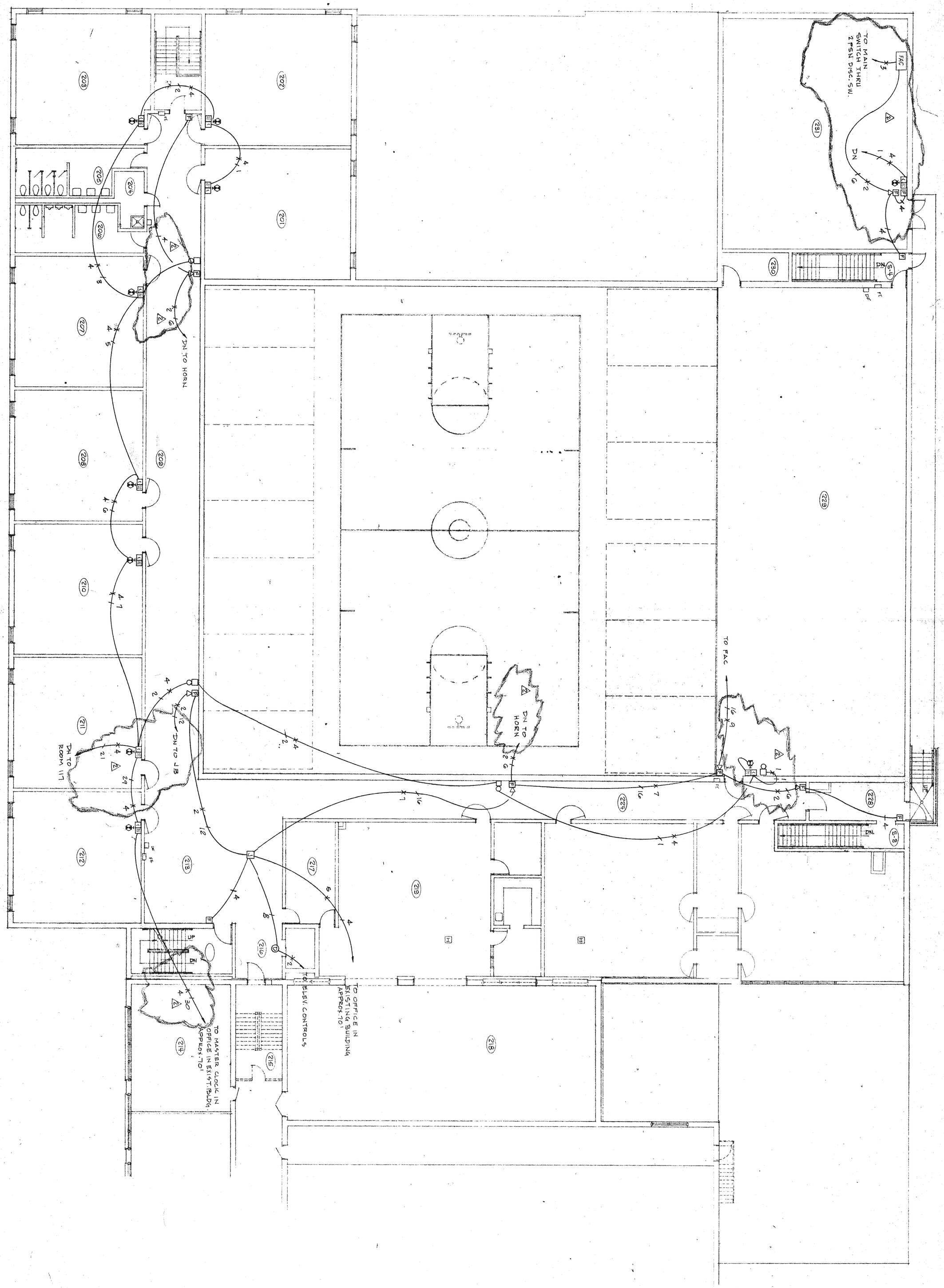

SECOND FLOOR PLAN
SCALE 1/8" = 1'-0"

DESIGN	RLA
DRAWN	WDB
DATE	SEPT. 1979
FILE NO.	78-50B
SHEET NO.	E-10

RODNEY L. ANDERSON LICENSED 6786 KANSAS PROFESSIONAL ENGINEER

ADDITION TO HIGH SCHOOL.
UNIFIED SCHOOL DISTRICT #320
WAMEGO, KANSAS
SECOND FLOOR PLAN
FIRE ALARM AND COMMUNICATIONS SYSTEM

WILSON & COMPANY
SALINA KANSAS

REVISION	DATE	BY
2 ADDENDUM NO. 2	28/9/79	MRE

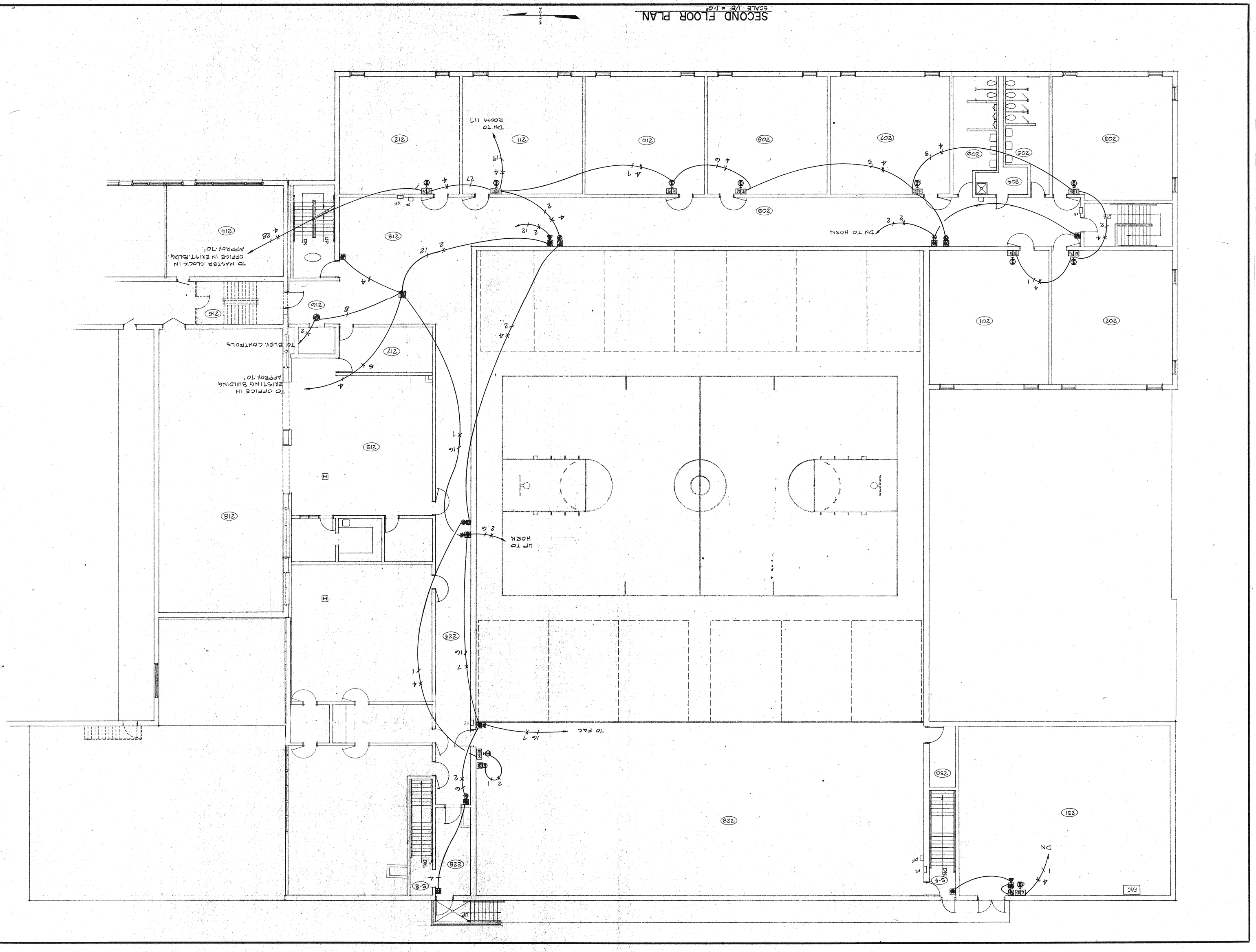

ADDITION TO HIGH SCHOOL
UNIFIED SCHOOL DISTRICT #323
WAMEGO, KANSAS
SECOND FLOOR PLAN
FIRE ALARM AND COMMUNICATIONS SYSTEM

RODNEY L. ANDERSON
LICENSED
6786
KANSAS
PROFESSIONAL ENGINEER

WILSON & COMPANY
SALINA KANSAS

REVISION	DATE	BY

DESIGN	DRAWN	DATE	FILE NO.	SHEET NO.
RLA	WDB	SEPT. 1979	78-50B	E-10

SECOND FLOOR PLAN

SCALE 1/8" = 1'-0"

N

W-E-C-E

DN TO HORN

TO FAC

UP TO HORN

TO ELEV. CONTROLS

TO OFFICE IN EXISTING BUILDING APPROX. 70'

TO MASTER CLOCK IN OFFICE IN EXIST. BLDG. APPROX. 70'

TH TO ROOM 117

Library Carrel

art Alcove

Simpson

Blue

DESIGN	RLA
DRAWN	WDB
DATE	SEPT. 1979
FILE NO.	78-50B
SHEET NO.	E-10

RODNEY L. ANDERSON LICENSED 6786 KANSAS PROFESSIONAL ENGINEER

ADDITION TO HIGH SCHOOL

UNIFIED SCHOOL DISTRICT #320

WAMEGO, KANSAS

SECOND FLOOR PLAN
FIRE ALARM AND COMMUNICATIONS SYSTEM

WILSON & COMPANY

SALINA KANSAS

REVISION	DATE	BY

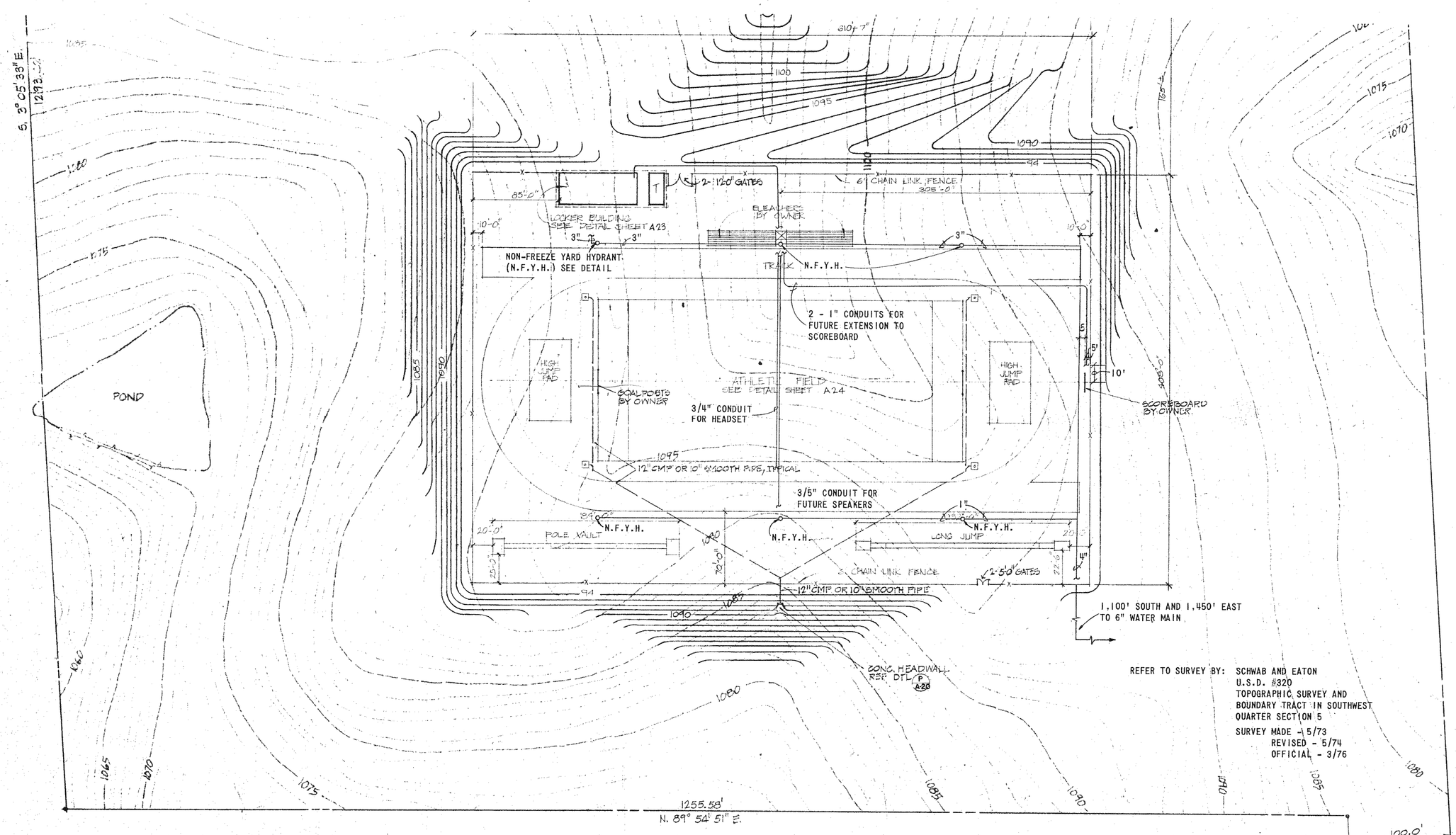

REFER TO SURVEY BY: SCHWAB AND EATON
U.S.D. #320
TOPOGRAPHIC SURVEY AND BOUNDARY TRACT IN SOUTHWEST QUARTER SECTION 5
SURVEY MADE - 5/73
REVISED - 5/74
OFFICIAL - 3/76

NOTE: ALL AREA WITHIN CHAIN LINK FENCE PERIMETER TO BE SEEDED, REF. SPECIFICATIONS
SEE SHEET A22-A FOR SEPTIC TANK & DRAIN FIELD

FINISHED SITE PLAN (ALTERNATE BID)
SCALE: 1"=60'-0"

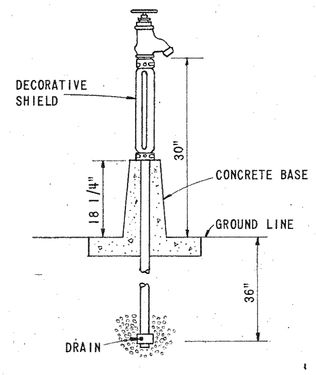

NON-FREEZE YARD HYDRANT

NO SCALE

NOTES:

1. UNDERGROUND TERMINATION OF CONDUITS SHALL BE MARKED BY A 6"x6" SQUARE OF CONCRETE AT GROUND LEVEL.

REVISION	DATE	BY

WILSON & COMPANY
SALINA KANSAS

ADDITION TO HIGH SCHOOL
UNIFIED SCHOOL DISTRICT #320
WAMEGO, KANSAS
FINISHED SITE PLAN - ALTERNATE BID

RODNEY L. ANDERSON LICENSED 6766 KANSAS PROFESSIONAL ENGINEER

DESIGN	MRE
DRAWN	PRW
DATE	SEPT. 1979
FILE NO.	78-50B
SHEET NO.	E-11

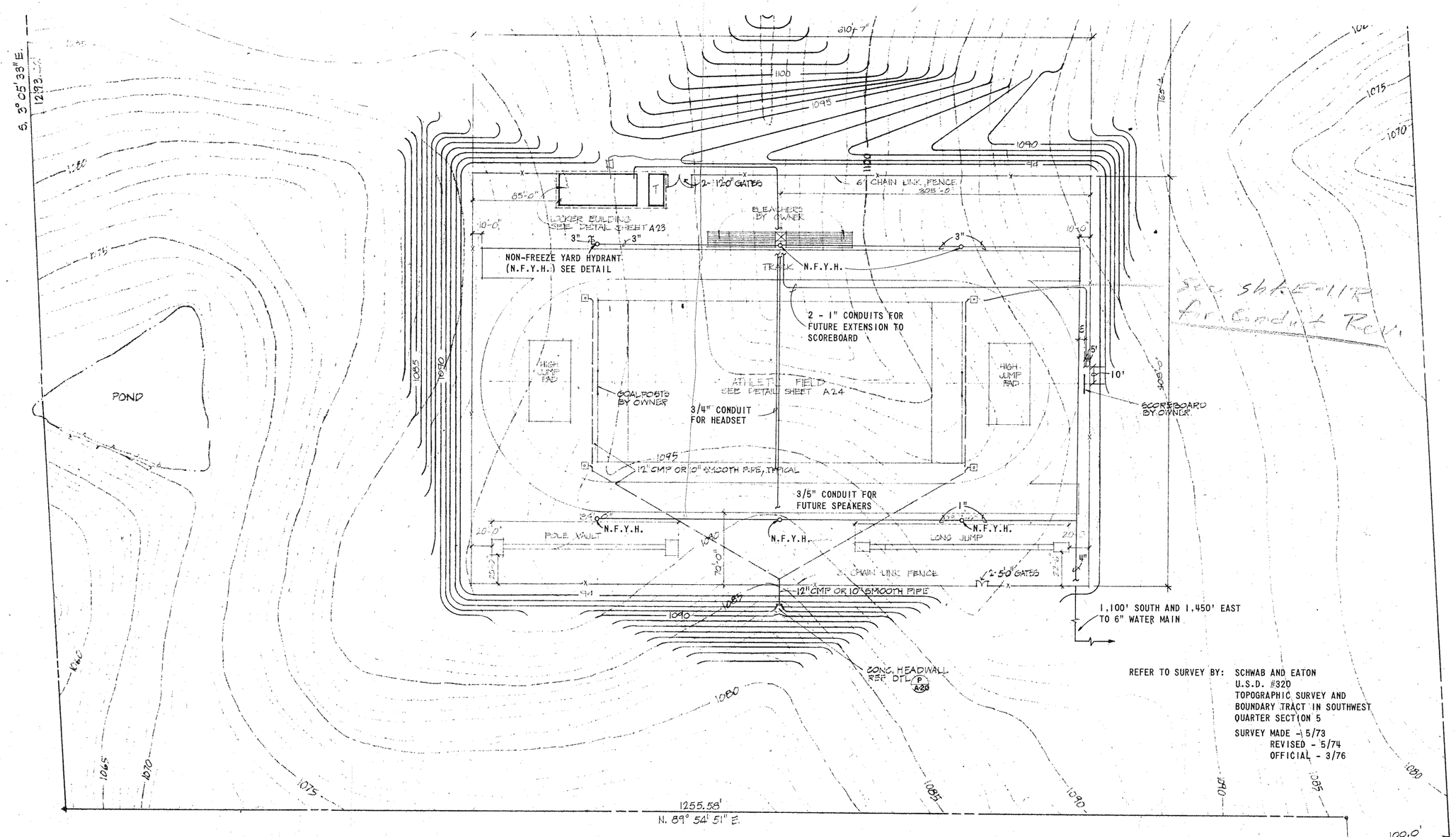

REFER TO SURVEY BY: SCHWAB AND EATON
U.S.D. #320
TOPOGRAPHIC SURVEY AND
BOUNDARY TRACT IN SOUTHWEST
QUARTER SECTION 5
SURVEY MADE - 5/73
REVISED - 5/74
OFFICIAL - 3/76

NOTE: ALL AREA WITHIN CHAIN LINK FENCE PERIMETER TO BE SEEDED, REF. SPECIFICATIONS
SEE SHEET A22-A FOR SEPTIC TANK & DRAIN FIELD

FINISHED SITE PLAN (ALTERNATE BID)
SCALE: 1"=60'-0"

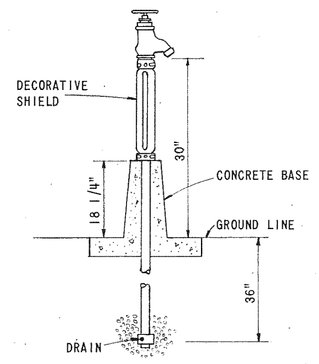

NON-FREEZE YARD HYDRANT

NO SCALE

NOTES:

1. UNDERGROUND TERMINATION OF CONDUITS SHALL BE MARKED BY A 6"x6" SQUARE OF CONCRETE AT GROUND LEVEL.

WILSON & COMPANY
SALINA KANSAS

REVISION | DATE | BY

ADDITION TO HIGH SCHOOL
UNIFIED SCHOOL DISTRICT #320
WAMEGO, KANSAS
FINISHED SITE PLAN - ALTERNATE BID

RODNEY L. ANDERSON LICENSED 6786 KANSAS PROFESSIONAL ENGINEER

DESIGN	MRE
DRAWN	PRW
DATE	SEPT. 1979
FILE NO.	78-50B
SHEET NO.	E-11

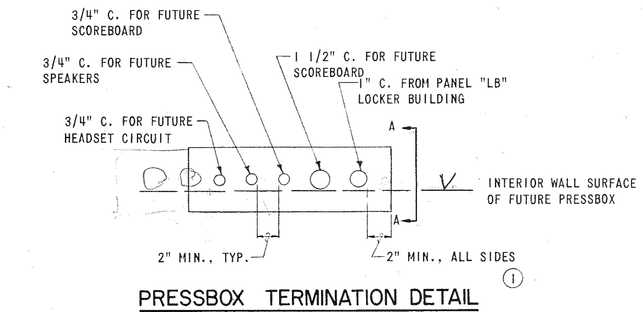

PRESSBOX TERMINATION DETAIL

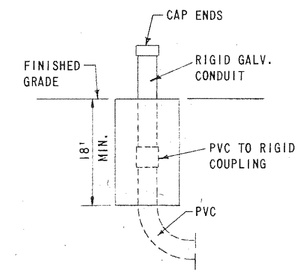

SECTION 'A-A' (1)

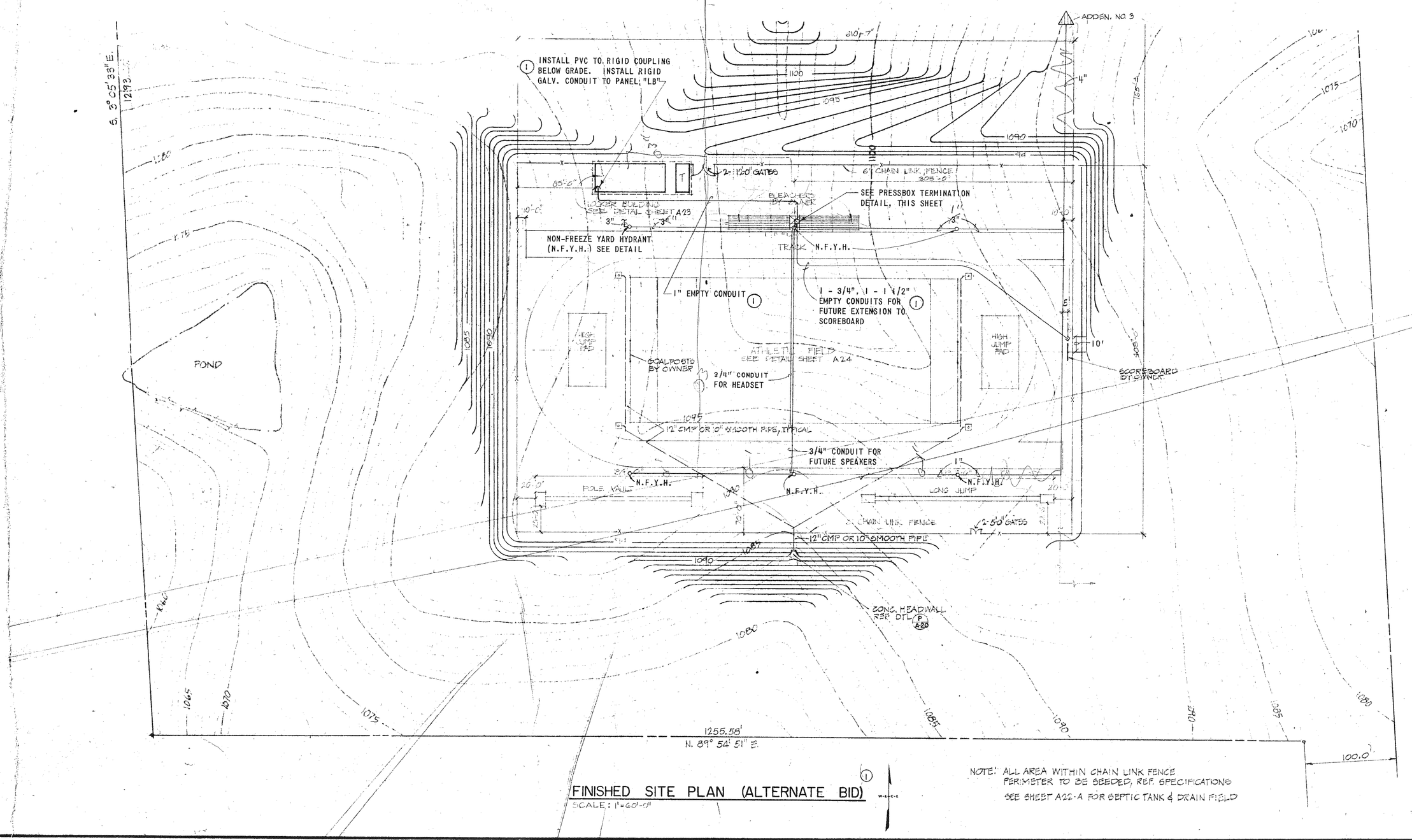

FINISHED SITE PLAN (ALTERNATE BID) (1)

SCALE: 1"=60'-0"

NOTE: ALL AREA WITHIN CHAIN LINK FENCE PERIMETER TO BE SEEDED, REF. SPECIFICATIONS

SEE SHEET A22-A FOR SEPTIC TANK & DRAIN FIELD

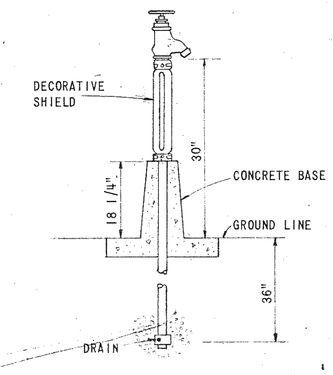

NON-FREEZE YARD HYDRANT

NO SCALE

NOTES: (1)

1. UNDERGROUND TERMINATION OF CONDUITS SHALL BE MARKED BY A 6"x6" SQUARE OF CONCRETE AT GROUND LEVEL, WITH THE LETTER "E" IMPRINTED ON TOP SURFACE. CAP CONDUIT ENDS.
2. UNDERGROUND CONDUIT SHALL BE PVC, N.E.C. APPROVED FOR BURIAL AND HAVE 18" MIN. COVER.

REVISION	DATE	BY
(1) CHANGE ORDER NO. 1	11/1/79	RLA

WILSON & COMPANY
SALINA
KANSAS

ADDITION TO HIGH SCHOOL
UNIFIED SCHOOL DISTRICT #320
WAMEGO, KANSAS
FINISHED SITE PLAN - ALTERNATE B D

RODNEY L. ANDERSON 9949 REGISTERED ARCHITECT KANSAS

DESIGN	MRE
DRAWN	PRW
DATE	SEPT. 1979
FILE NO.	78-508
SHEET NO.	E-11 R

CABINET HEATER SCHEDULE			
MARK	KW	BTU/ HR.	ELECTRICAL SERVICE
CH-1	2.3	7,847	277/1/60
	1.1	3,753	
CH-2	7.9	26,954	277/1/60
	1.4	4,776	
CH-3	7.9	26,954	277/1/60
	1.4	4,776	

CABINET HEATERS SHALL BE TRANE MODEL H WITH OFF-VENT-HI-LO SELECTOR SWITCH AND UNIT MOUNTED THERMOSTAT OR EQUAL BY OTHER MANUFACTURER

RADIANT PANEL HEATER SCHEDULE			
MARK	KW	BTU/ HR.	ELECTRICAL SERVICE
RH-1	.75	2,559	277/1/60
RH-2	.75	2,559	277/1/60
RH-3	.75	2,559	277/1/60
RH-4	.75	2,559	277/1/60
RH-5	.5	1,706	277/1/60
RH-6	.5	1,706	277/1/60
RH-7	.25	853	277/1/60
RH-8	.25	853	277/1/60
RH-9	.5	1,706	277/1/60
RH-10	.75	2,559	277/1/60
RH-11	.75	2,559	277/1/60
RH-12	1.0	3,412	277/1/60
RH-13	1.0	3,412	277/1/60*
RH-14	.25	853	277/1/60
RH-15	.25	853	277/1/60
RH-16	1.0	3,412	277/1/60 *
RH-17	1.0	3,412	277/1/60 *

RADIANT HEATERS SHALL BE AZTEC ASL SURFACE MOUNTED WITH SILICON SEALS

*ORDER WITH WALL MOUNTED LINE VOLTAGE THERMOSTAT AND LOCKING GUARD

UNIT HEATER SCHEDULE			
MARK	KW	BTU/ HR.	ELECTRICAL SERVICE
UH-1	1.0	3,412	277/1/60
UH-2	1.5	5,118	277/1/60
UH-3	1.5	5,118	277/1/60
UH-4	1.5	5,118	277/1/60
UH-5	1.5	5,118	277/1/60
UH-6	.3	1,023	277/1/60
UH-7	2.8	9,553	277/1/60
UH-8	2.1	7,165	277/1/60
UH-9	2.8	9,553	277/1/60

UNIT HEATERS SHALL BE AMERICAN AIR-FLOW SERIES HGU OR EQUAL BY OTHER MANUFACTURER BUT SHALL NOT EXCEED 3 KW WITH UNIT MOUNTED TOGGLE TYPE DISCONNECT SWITCH

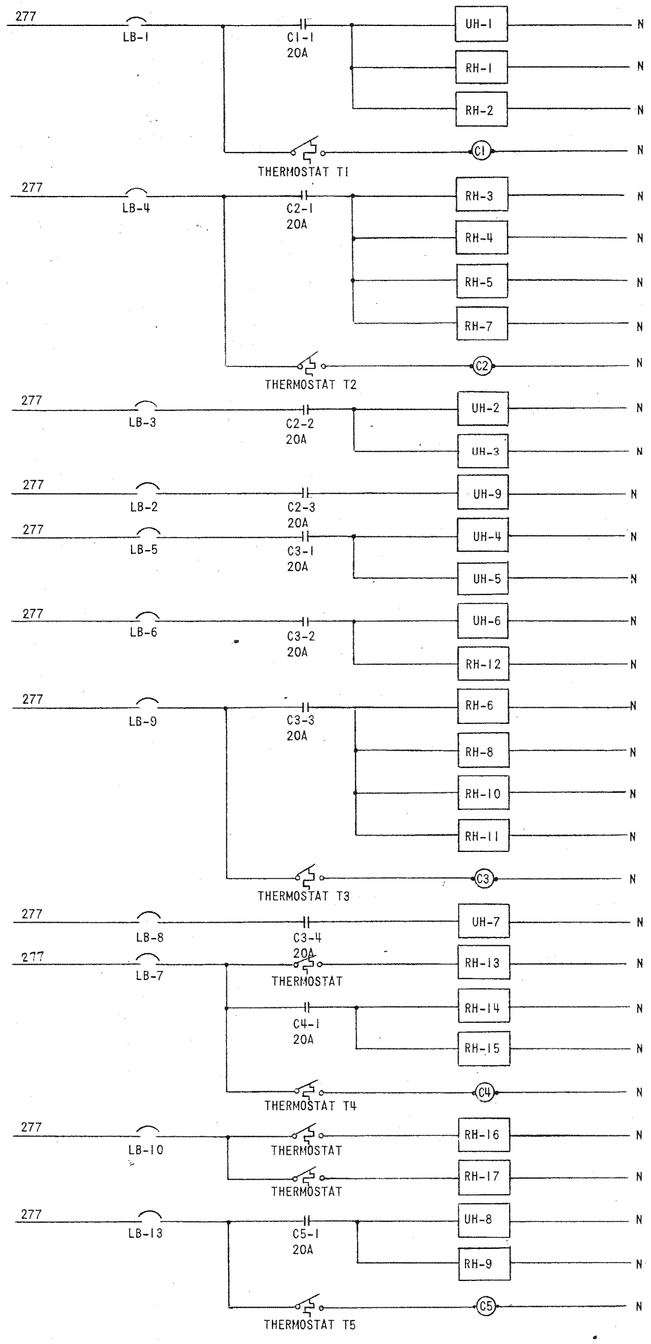

HEATING CONTROL DIAGRAM

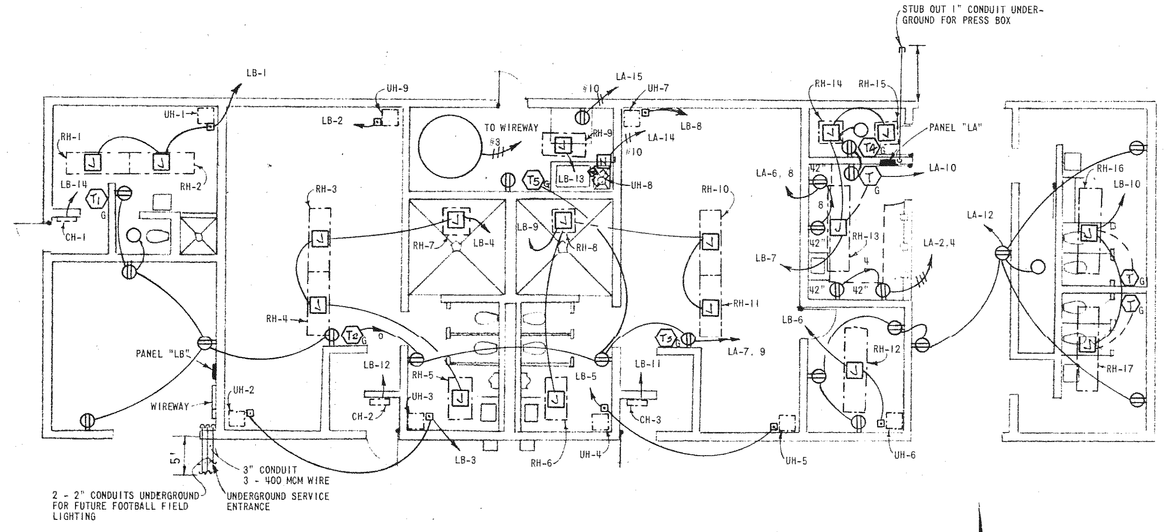

POWER - FLOOR PLAN OF LOCKER BUILDING (ALTERNATE BID)

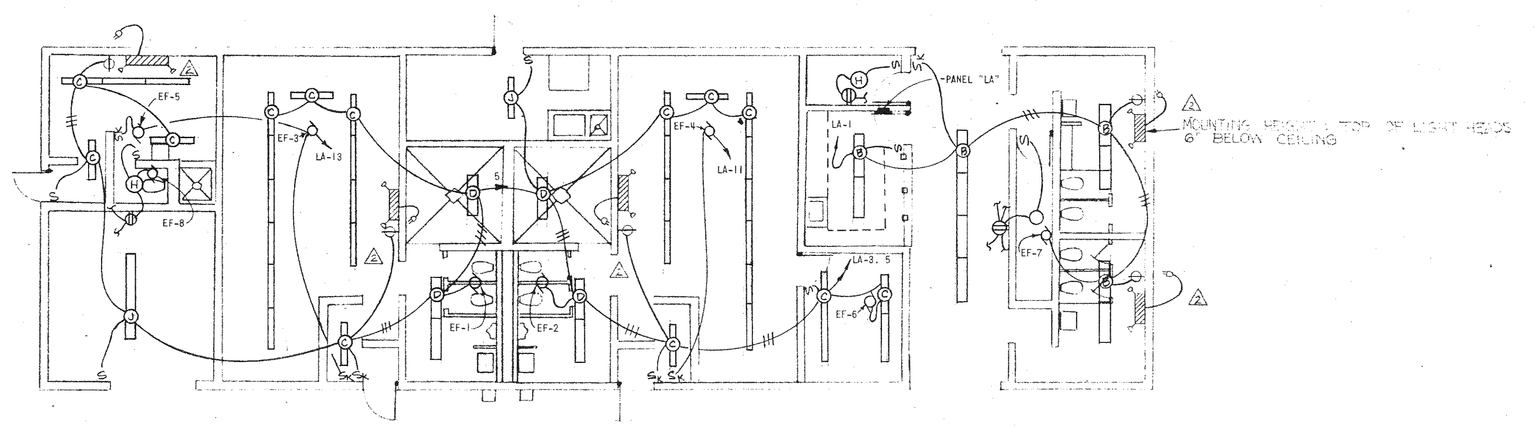

LIGHTING - FLOOR PLAN OF LOCKER BUILDING (ALTERNATE BID)

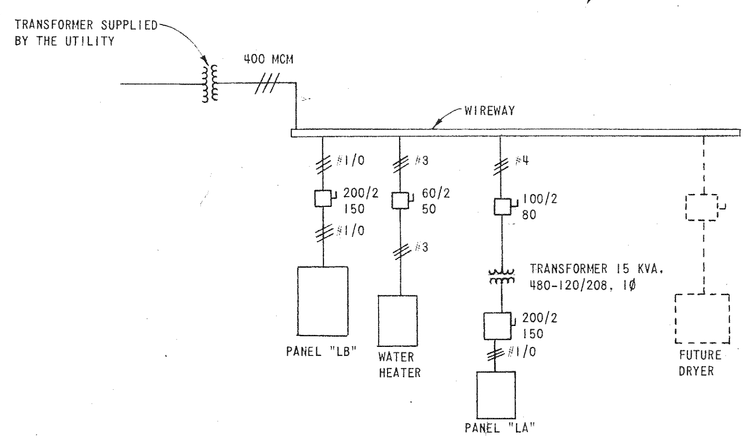

POWER SINGLE LINE DIAGRAM

PANELBOARD "LA" LOCATION: CONCESSION STAND FLUSH MOUNTED, 1ø, 3W, 120/208V, 225A, MLO											
LOAD	LTG	REC	BKR	CKT	ø	CKT	BKR	LTG	REC	LOAD
CONCESSION RESTROOM	X		20	1	A	2	15		1	CONCESSION STAND
E. LOCKER RM., EF-6	X		20	3	B	4	15		1	CONCESSION STAND
W. LOCKER RM., EF-1	X		20	5	A	6	15		1	CONCESSION STAND
EQUIP. RM., W. LOCKER		5	20	7	B	8	15		1	CONCESSION STAND
E. LOCKER, LAUNDRY		5	20	9	A	10	15		2	CONCESSION STAND
EF-4			15	11	B	12	20		7	WHIRLPOOL RESTROOMS
EF-5, EF-3			20	13	A	14	50		1	WASHER
DRYER		1	30	15	B					
					A	18	20			SPARE
SPACE				19	B	20	20			SPARE
SPACE				21	A	22				SPACE
SPACE				23	B	24				SPACE

PANELBOARD "LB" LOCATION: EQUIPMENT ROOM SURFACE MOUNTED, 1ø, 3W, 277/480V, 225A, MLO										
LOAD	LTG	REC	BKR	CKT	ø	CKT	BKR	LTG	REC	LOAD
UH-1, RH-1, 2			20	1	A	2	15			UH-9
UH-2, 3			30	3	B	4	15			RH-3, 4, 5, 7
UH-4, 5			30	5	A	6	20			UH-6, RH-12
RH-13, 14, 15			15	7	B	8	15			UH-7
RH-6, 8, 10, 11			15	9	A	10	15			RH-16, 17
CH-2			40	11	B	12	40			CH-3
UH-8, RH-9			20	13	A	14	20			CH-1
SPARE			20	15	B	16	20			SPARE
SPACE				17	A	18				SPACE
SPACE				19	B	20				SPACE

REVISION	DATE	BY
ADDENDUM NO. 2	28/9/79	MRE

WILSON & COMPANY
KANSAS
SALINA

ADDITION TO HIGH SCHOOL
UNIFIED SCHOOL DISTRICT #320
WAMEGO, KANSAS

LOCKER BUILDING - POWER AND LIGHTING FLOOR PLANS AND SCHEDULES

ROBERT GENE ANDERSON 6786 KANSAS REGISTERED PROFESSIONAL ENGINEER

DESIGN	MRE
DRAWN	MLK
DATE	SEPT. 1979
FILE NO.	78-50B
SHEET NO.	E-12

CABINET HEATER SCHEDULE			
MARK	KW	BTU/HR.	ELECTRICAL SERVICE
CH-1 ✓	2.3	7,847	277/1/60
	1.1	3,753	
CH-2 ✓	7.9	26,954	277/1/60
	1.4	4,776	
CH-3 ✓	7.9	26,954	277/1/60
	1.4	4,776	

CABINET HEATERS SHALL BE TRANE MODEL H WITH OFF-VENT-HI-LO SELECTOR SWITCH AND UNIT MOUNTED THERMOSTAT OR EQUAL BY OTHER MANUFACTURER

RADIANT PANEL HEATER SCHEDULE			
MARK	KW	BTU/HR.	ELECTRICAL SERVICE
RH-1	.75 ✓	2,559	277/1/60
RH-2	.75 ✓	2,559	277/1/60
RH-3	.75 ✓	2,559	277/1/60
RH-4	.75 ✓	2,559	277/1/60
RH-5	.5 ✓	1,706	277/1/60
RH-6	.5 ✓	1,706	277/1/60
RH-7	.25 ✓	853	277/1/60
RH-8	.25 ✓	853	277/1/60
RH-9	.5 ✓	1,706	277/1/60
RH-10	.75 ✓	2,559	277/1/60
RH-11	.75 ✓	2,559	277/1/60
RH-12	1.0 ✓	3,412	277/1/60
RH-13	1.0 ✓	3,412	277/1/60 *
RH-14	.25	853	277/1/60
RH-15	.25	853	277/1/60
RH-16	1.0	3,412	277/1/60 *
RH-17	1.0	3,412	277/1/60 *

RADIANT HEATERS SHALL BE AZTEC ASL SURFACE MOUNTED WITH SILICON SEALS

* ORDER WITH WALL MOUNTED LINE VOLTAGE THERMOSTAT AND LOCKING GUARD

UNIT HEATER SCHEDULE			
MARK	KW	BTU/HR.	ELECTRICAL SERVICE
UH-1	1.0	3,412	277/1/60
UH-2	1.5	5,118	277/1/60
UH-3	1.5	5,118	277/1/60
UH-4	1.5	5,118	277/1/60
UH-5	1.5	5,118	277/1/60
UH-6	.3	1,023	277/1/60
UH-7	2.8	9,553	277/1/60
UH-8	2.1	7,165	277/1/60
UH-9	2.8	9,553	277/1/60

UNIT HEATERS SHALL BE AMERICAN AIR-FLOW SERIES HGU OR EQUAL BY OTHER MANUFACTURER BUT SHALL NOT EXCEED 3 KW WITH UNIT MOUNTED TOGGLE TYPE DISCONNECT SWITCH

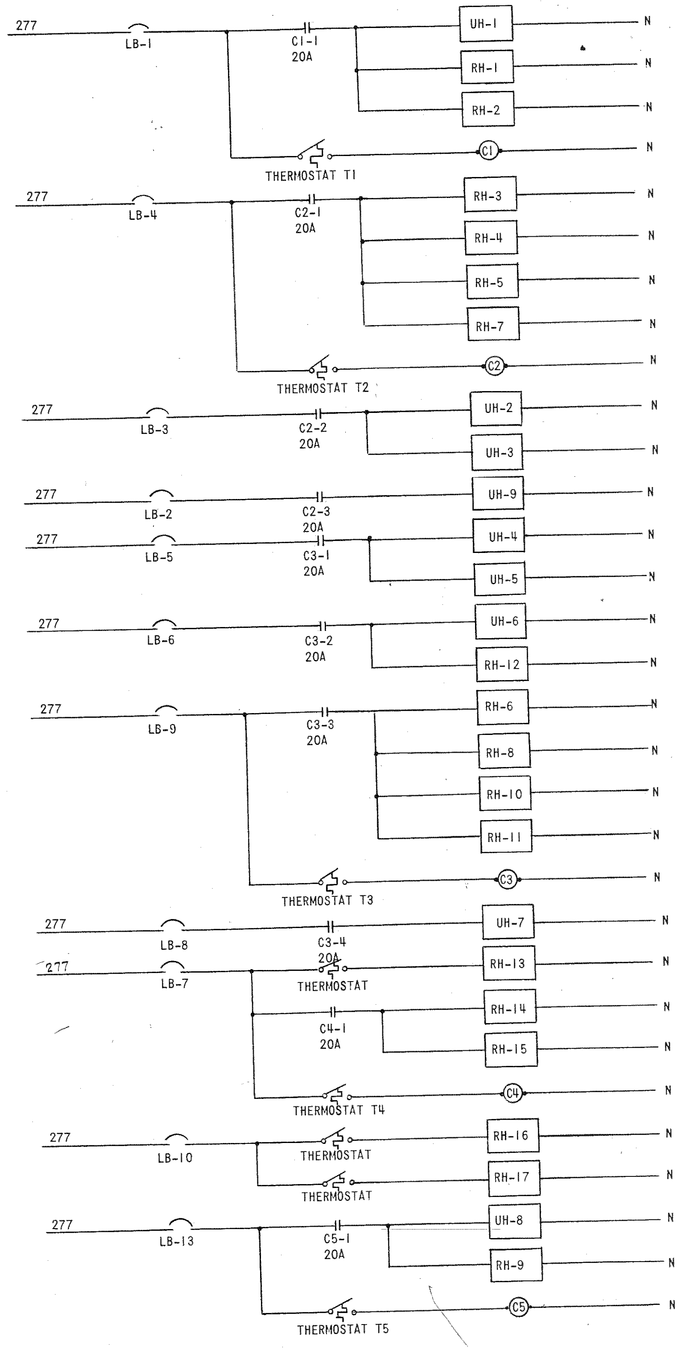

HEATING CONTROL DIAGRAM

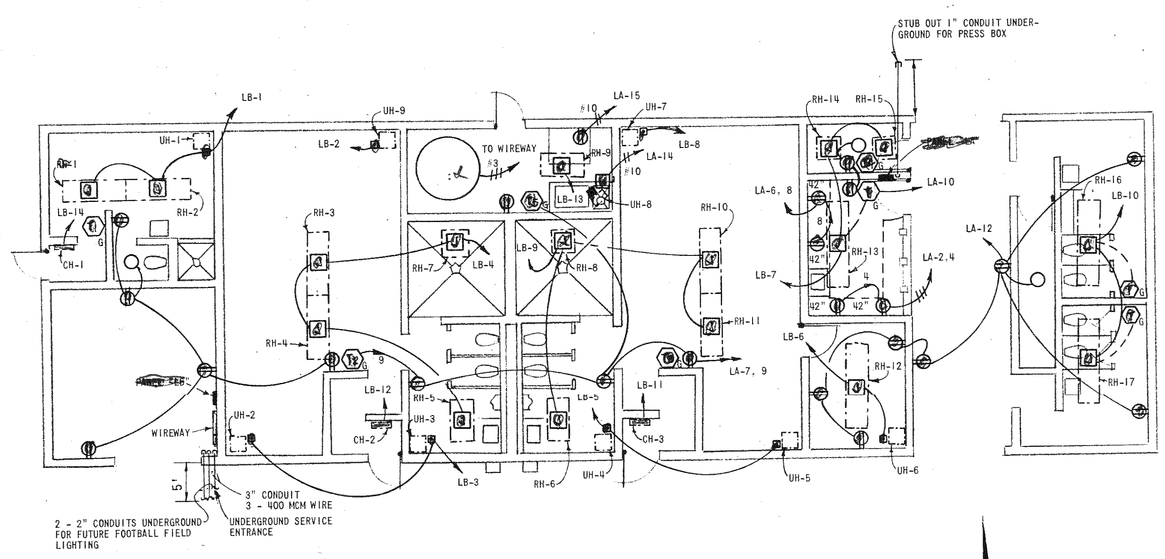

POWER - FLOOR PLAN OF LOCKER BUILDING (ALTERNATE BID)

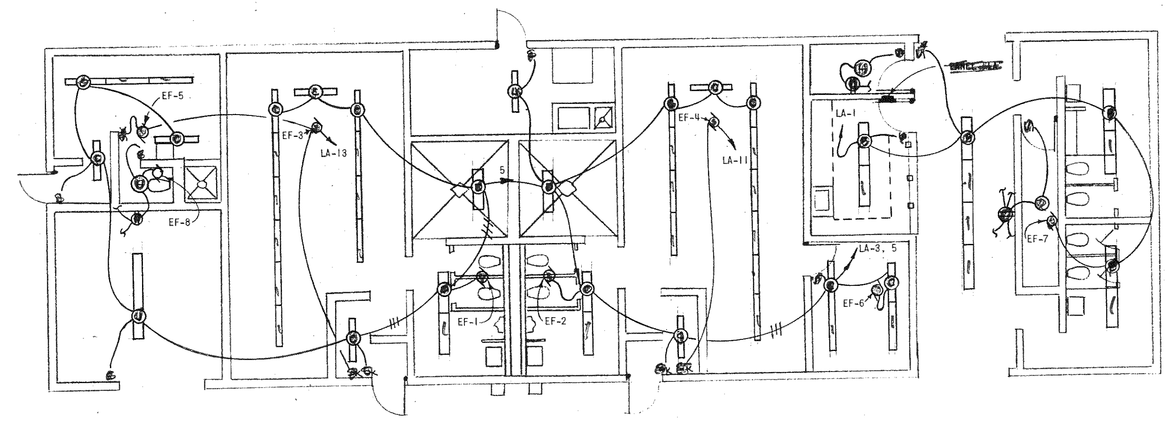

LIGHTING - FLOOR PLAN OF LOCKER BUILDING (ALTERNATE BID)

PANELBOARD "LA" LOCATION: CONCESSION STAND
FLUSH MOUNTED, 1Ø, 3W, 120/208V, 225A, MLO

LOAD	LTG	REC	BKR	CKT	Ø	CKT	BKR	LTG	REC	LOAD
CONCESSION RESTROOM	X		20	1	A	2	15		1	CONCESSION STAND
E. LOCKER RM., EF-6	X		20	3	B	4	15		1	CONCESSION STAND
W. LOCKER RM., EF-1	X		20	5	A	6	15		1	CONCESSION STAND
EQUIP. RM., W. LOCKER		5	20	7	B	8	15		1	CONCESSION STAND
E. LOCKER, LAUNDRY		5	20	9	A	10	15		2	CONCESSION STAND
EF-4			15	11	B	12	20		7	WHIRLPOOL RESTROOMS
EF-5, EF-3			20	13	A	14	50		1	WASHER
DRYER		1	30	15	B					
					A	18	20			SPARE
SPACE				19	B	20	20			SPARE
SPACE				21	A	22				SPACE
SPACE				23	B	24				SPACE

PANELBOARD "LB" LOCATION: EQUIPMENT ROOM
SURFACE MOUNTED, 1Ø, 3W, 277/480V, 225A, MLO

LOAD	LTG	REC	BKR	CKT	Ø	CKT	BKR	LTG	REC	LOAD
UH-1, RH-1, 2			20	1	A	2	15			UH-9
UH-2, 3			30	3	B	4	15			RH-3, 4, 5, 7
UH-4, 5			30	5	A	6	20			UH-6, RH-12
RH-13, 14, 15			15	7	B	8	15			UH-7
RH-6, 8, 10, 11			15	9	A	10	15			RH-16, 17
CH-2			40	11	B	12	40			CH-3
UH-8, RH-9			20	13	A	14	20			CH-1
SPARE			20	15	B	16	20			SPARE
SPACE				17	A	18				SPACE
SPACE				19	B	20				SPACE

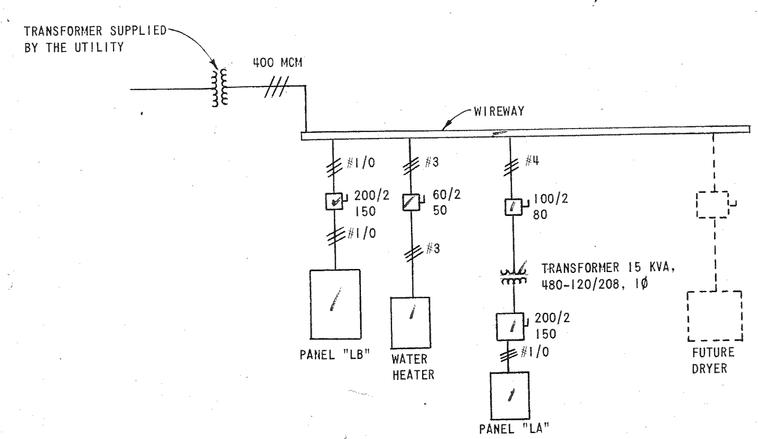

POWER SINGLE LINE DIAGRAM

REVISION	DATE	BY

WILSON & COMPANY
KANSAS
SALINA

ADDITION TO HIGH SCHOOL
UNIFIED SCHOOL DISTRICT #320
WAMEGO, KANSAS

LOCKER BUILDING - POWER AND LIGHTING FLOOR PLANS AND SCHEDULES

ANDERSON 6705 REGISTERED ENGINEER KANSAS

DESIGN	MRE
DRAWN	MLK
DATE	SEPT. 1979
FILE NO.	78-508
SHEET NO.	E-12

CABINET HEATER SCHEDULE			
MARK	KW	BTU/ HR.	ELECTRICAL SERVICE
CH-1	2.3	7,847	277/1/60
	1.1	3,753	
CH-2	7.9	26,954	277/1/60
	1.4	4,776	
CH-3	7.9	26,954	277/1/60
	1.4	4,776	

CABINET HEATERS SHALL BE TRANE MODEL H WITH OFF-VENT-HI-LO SELECTOR SWITCH AND UNIT MOUNTED THERMOSTAT OR EQUAL BY OTHER MANUFACTURER

RADIANT PANEL HEATER SCHEDULE			
MARK	KW	BTU/ HR.	ELECTRICAL SERVICE
RH-1	.75	2,559	277/1/60
RH-2	.75	2,559	277/1/60
RH-3	.75	2,559	277/1/60
RH-4	.75	2,559	277/1/60
RH-5	.5	1,706	277/1/60
RH-6	.5	1,706	277/1/60
RH-7	.25	853	277/1/60
RH-8	.25	853	277/1/60
RH-9	.5	1,706	277/1/60
RH-10	.75	2,559	277/1/60
RH-11	.75	2,559	277/1/60
RH-12	1.0	3,412	277/1/60
RH-13	1.0	3,412	277/1/60*
RH-14	.25	853	277/1/60
RH-15	.25	853	277/1/60
RH-16	1.0	3,412	277/1/60 *
RH-17	1.0	3,412	277/1/60 *

RADIANT HEATERS SHALL BE AZTEC ASL SURFACE MOUNTED WITH SILICON SEALS

*ORDER WITH WALL MOUNTED LINE VOLTAGE THERMOSTAT AND LOCKING GUARD

UNIT HEATER SCHEDULE			
MARK	KW	BTU/ HR.	ELECTRICAL SERVICE
UH-1	1.0	3,412	277/1/60
UH-2	1.5	5,118	277/1/60
UH-3	1.5	5,118	277/1/60
UH-4	1.5	5,118	277/1/60
UH-5	1.5	5,118	277/1/60
UH-6	.3	1,023	277/1/60
UH-7	2.8	9,553	277/1/60
UH-8	2.1	7,165	277/1/60
UH-9	2.8	9,553	277/1/60

UNIT HEATERS SHALL BE AMERICAN AIR-FLOW SERIES HGU OR EQUAL BY OTHER MANUFACTURER BUT SHALL NOT EXCEED 3 KW WITH UNIT MOUNTED TOGGLE TYPE DISCONNECT SWITCH

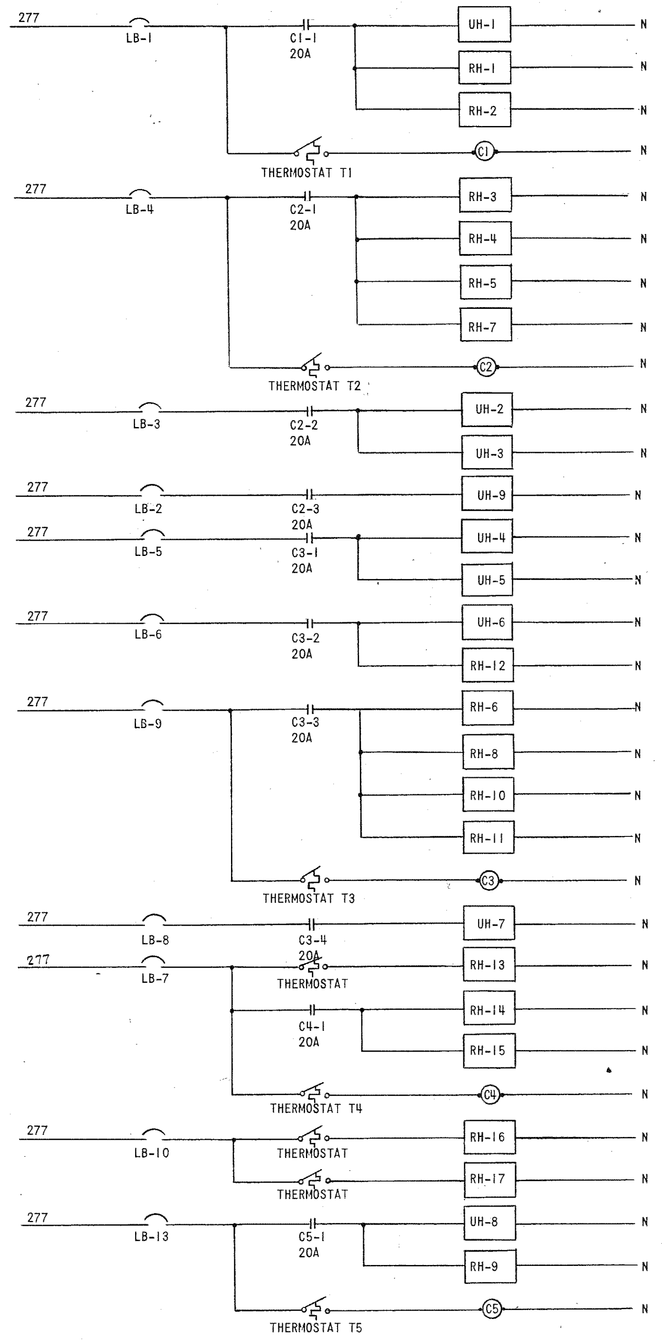

HEATING CONTROL DIAGRAM

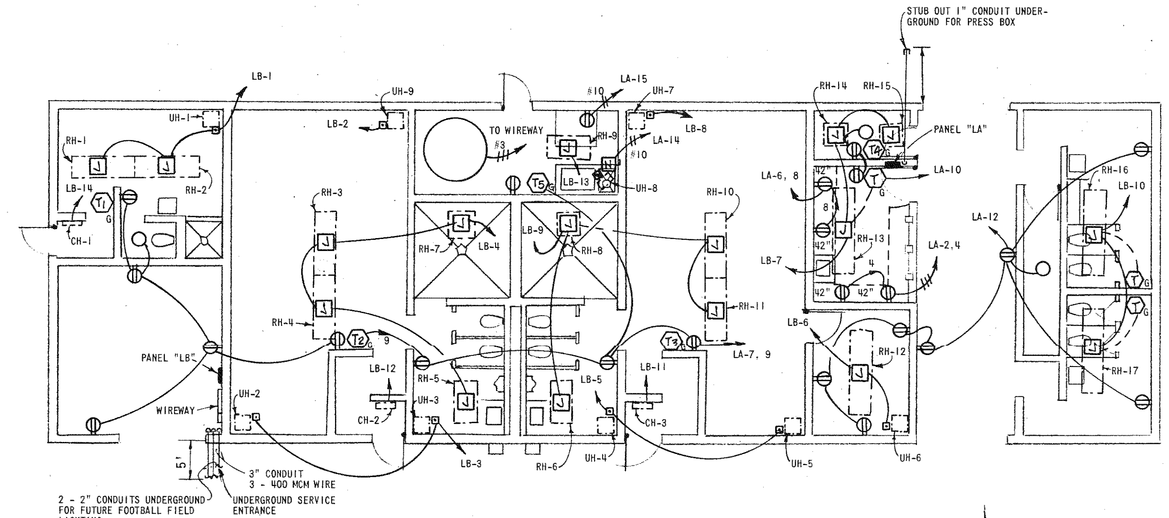

POWER-
FLOOR PLAN OF LOCKER BUILDING (ALTERNATE BID)

W-A-C-E

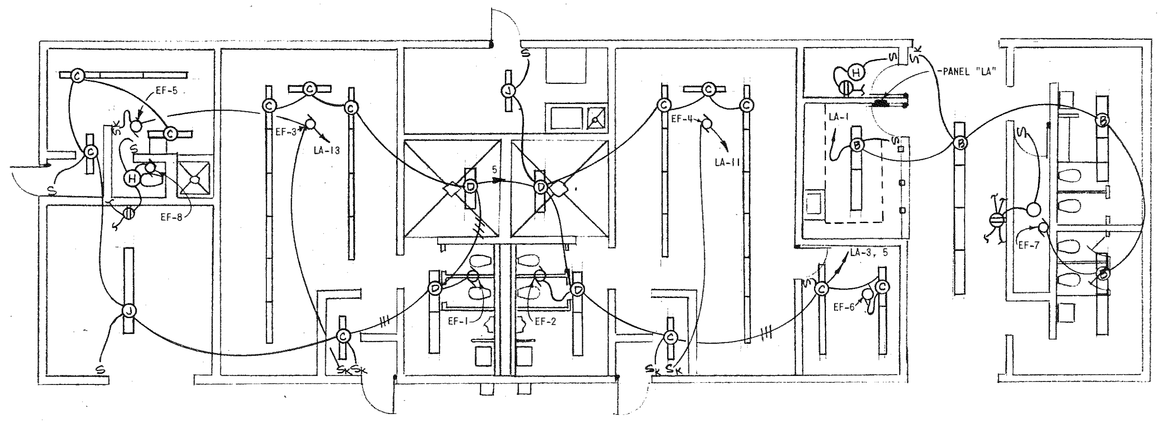

LIGHTING-
FLOOR PLAN OF LOCKER BUILDING (ALTERNATE BID)

W-A-C-E

PANELBOARD "LA" LOCATION: CONCESSION STAND FLUSH MOUNTED, 1Ø, 3W, 120/208V, 225A, MLO										
LOAD	LTG	REC	BKR	CKT	Ø	CKT	BKR	LTG	REC	LOAD
CONCESSION RESTROOM	X		20	1	A	2	15		1	CONCESSION STAND
E. LOCKER RM., EF-6	X		20	3	B	4	15		1	CONCESSION STAND
W. LOCKER RM., EF-1	X		20	5	A	6	15		1	CONCESSION STAND
EQUIP. RM., W. LOCKER		5	20	7	B	8	15		1	CONCESSION STAND
E. LOCKER, LAUNDRY		5	20	9	A	10	15		2	CONCESSION STAND
EF-4			15	11	B	12	20		7	WHIRLPOOL RESTROOMS
EF-5, EF-3			20	13	A	14	50		1	WASHER
DRYER		1	30	15	B					
					A	18	20			SPARE
SPACE				19	B	20	20			SPARE
SPACE				21	A	22				SPACE
SPACE				23	B	24				SPACE

PANELBOARD "LB" LOCATION: EQUIPMENT ROOM SURFACE MOUNTED, 1Ø, 3W, 277/480V, 225A, MLO										
LOAD	LTG	REC	BKR	CKT	Ø	CKT	BKR	LTG	REC	LOAD
UH-1, RH-1, 2			20	1	A	2	15			UH-9
UH-2, 3			30	3	B	4	15			RH-3, 4, 5, 7
UH-4, 5			30	5	A	6	20			UH-6, RH-12
RH-13, 14, 15			15	7	B	8	15			UH-7
RH-6, 8, 10, 11			15	9	A	10	15			RH-16, 17
CH-2			40	11	B	12	40			CH-3
UH-8, RH-9			20	13	A	14	20			CH-1
SPARE			20	15	B	16	20			SPARE
SPACE				17	A	18				SPACE
SPACE				19	B	20				SPACE

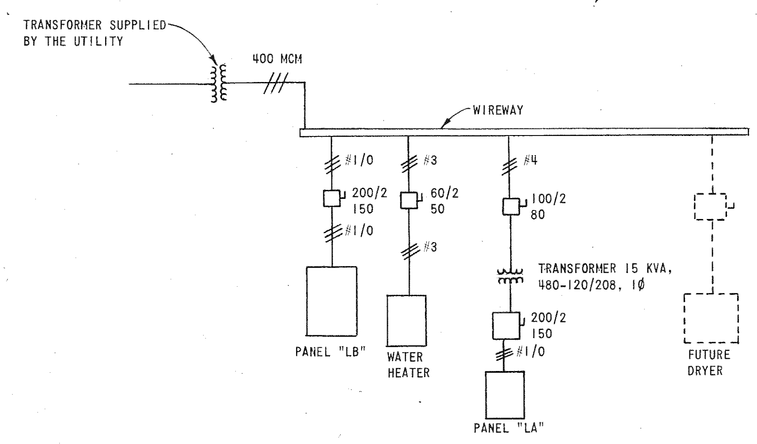

POWER SINGLE LINE DIAGRAM

Void

See C.O. #E-122

REVISION	DATE	BY

WILSON & COMPANY
SALINA KANSAS

ADDITION TO HIGH SCHOOL
UNIFIED SCHOOL DISTRICT #320
WAMEGO, KANSAS
LOCKER BUILDING - POWER AND LIGHTING FLOOR PLANS AND SCHEDULES

DESIGN	MRE
DRAWN	MLK
DATE	SEPT. 1979
FILE NO.	78-50B
SHEET NO.	E-12

78-050B

CABINET HEATER SCHEDULE			
MARK	MIN. KW REQ'D.	BTU/ HR.	ELECTRICAL SERVICE
CH-1	2.3	7,847	240/1/60
CH-2	3.5	11,950	240/1/60
CH-3	3.5	11,950	240/1/60

CABINET HEATERS SHALL BE TRANE MODEL H. UNIT SIZE 02. WITH HEAT-OFF-VENT SELECTOR SWITCH AND UNIT MOUNTED THERMOSTAT OR EQUIVALENT BY OTHER MANUFACTURER.

FURNISH WITH TAMPERPROOF FRONT PANEL AND ACCESS DOOR. FURNISH WITH ADDITIONAL DEPTH FRONT PANEL WHICH WILL ALLOW RECESSING HEATER IN 8" BLOCK WALL.

RADIANT PANEL HEATER SCHEDULE			
MARK	KW	BTU/ HR.	ELECTRICAL SERVICE
RH-1	.75	2,559	240/1/60
RH-2	.75	2,559	240/1/60
RH-3	.75	2,559	240/1/60
RH-4	.75	2,559	240/1/60
RH-5	.5	1,706	240/1/60
RH-6	.5	1,706	240/1/60
RH-7	.25	853	240/1/60
RH-8	.25	853	240/1/60
RH-9	.5	1,706	240/1/60
RH-10	.75	2,559	240/1/60
RH-11	.75	2,559	240/1/60
RH-12	1.0	3,412	240/1/60
RH-13	1.0	3,412	240/1/60
RH-14	.25	853	240/1/60
RH-15	.25	853	240/1/60
RH-16	1.0	3,412	240/1/60
RH-17	1.0	3,412	240/1/60

RADIANT HEATERS SHALL BE AZTEC ASL SURFACE MOUNTED WITH SILICON SEALS

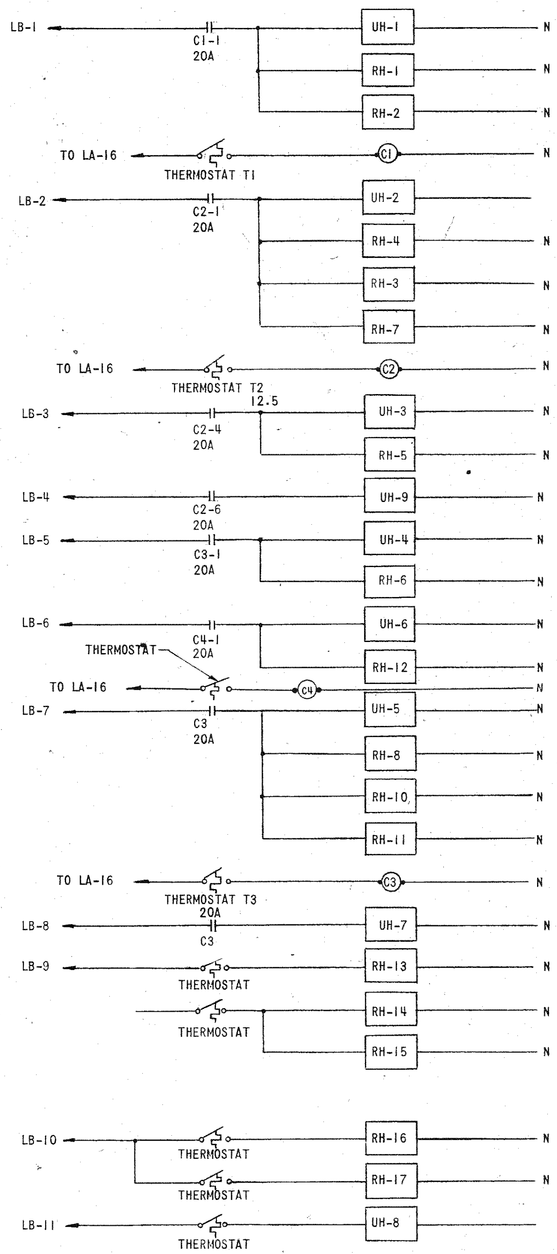

UNIT HEATER SCHEDULE		
MARK	BTU/ HR.	ELECTRICAL SERVICE
UH-1	2.0	240/1/60
UH-2	2.0	240/1/60
UH-3	2.0	240/1/60
UH-4	2.0	240/1/60
UH-5	2.0	240/1/60
UH-6	2.0	240/1/60
UH-7	3.0	240/1/60
UH-8	3.0	240/1/60
UH-9	3.0	240/1/60

UNIT HEATERS SHALL BE TRANE HORIZONTAL DISCHARGE TYPE WITH UNIT MOUNTED DISCONNECT SWITCH, OR EQUIVALENT

HEATING CONTROL DIAGRAM

NOTES:

A. THERMOSTATS SHALL BE HONEYWELL MODEL T6051 WITH LOCKING GUARD OR EQUIVALENT.

B. HEATER CONTROL CONTACTORS SHALL BE SQUARE D, CLASS 8903 OR EQUIVALENT. MINIMUM CONTACT RATINGS ARE SHOWN MOUNTED IN HEATER CONTROL CABINET ADJACENT TO PANEL "LB" SEE POWER PLAN.

PANELBOARD "LA" LOCATION: CONCESSION STAND SURFACE MOUNTED, 1Ø, 3W, 120/240V. 100A MAIN BREAKER										
LOAD	LTG	REC	BKR	CKT	Ø	CKT	BKR	LTG	REC	LOAD
CONCESSION RESTROOM	X		20	1	A	2	20		1	CONCESSION STAND
E. LOCKER RM., EF-6,2	X		20	3	B	4	20		1	CONCESSION STAND
W. LOCKER RM., EF-1	X		20	5	A	6	20		1	CONCESSION STAND
EQUIP. RM., W. LOCKER		5	20	7	B	8	20		1	CONCESSION STAND
E. LOCKER, LAUNDRY		5	20	9	A	10	20		2	CONCESSION STAND
EF-4			15	11	B	12	20		7	WHIRLPOOL, RESTROOMS
EF-5, EF-3			20	13	A	14	20		1	WASHER
DRYER		1	30	15	B		20			CONTACTOR CONTROL CIR.
				17	A	18	20			SPARE
OUTDOOR FLOODLIGHTS			20	19	B	20	20			SPARE
SPARE FOR FUTURE			60	21	A	22				SPACE
FEEDER TO PRESS BOX LOAD CENTER				23	B	24				SPACE
SPACE										

PANELBOARD "LB" EQUIP. RM. EMD = 146 KVA SURFACE MOUNTED, 1Ø, 3W, 240/480V, 400A MAIN BREAKER										
LOAD	LTG	REC	BKR	CKT	Ø	CKT	BKR	LTG	REC	LOAD
UH-1, RH-1, RH-2			20	1	A	2	20			UH-2,RH-4,RH-3,RH-7
UH-3, RH-5			20	3	B	4	20			UH-9
UH-4, RH-6			20	5	A	6	20			UH-6, RH-12
UH-5,RH-8,RH-10,RH-11			20	7	B	8	20			UH-7
RH-13, RH-14, RH-15			20	9	A	10	20			RH-16, RH-17
UH-8			20	11	B	12	20			CH-1
CH-2			20	13	A	14	20			CH-3
WATER HEATER			50	15	B	16	60			TRANSFORMER "T1"
				17	A	18				25 KVA
SPACE FOR FUTURE DRYER			-	19	B	20				SPACE FOR FUTURE
				21	A	22				FOOTBALL FIELD LIGHT.
RANGE			50	23	B	24				SPACE
SPACE				25	A	26				SPACE
SPACE				27	B	28				SPACE
SPACE				29	A	30				SPACE

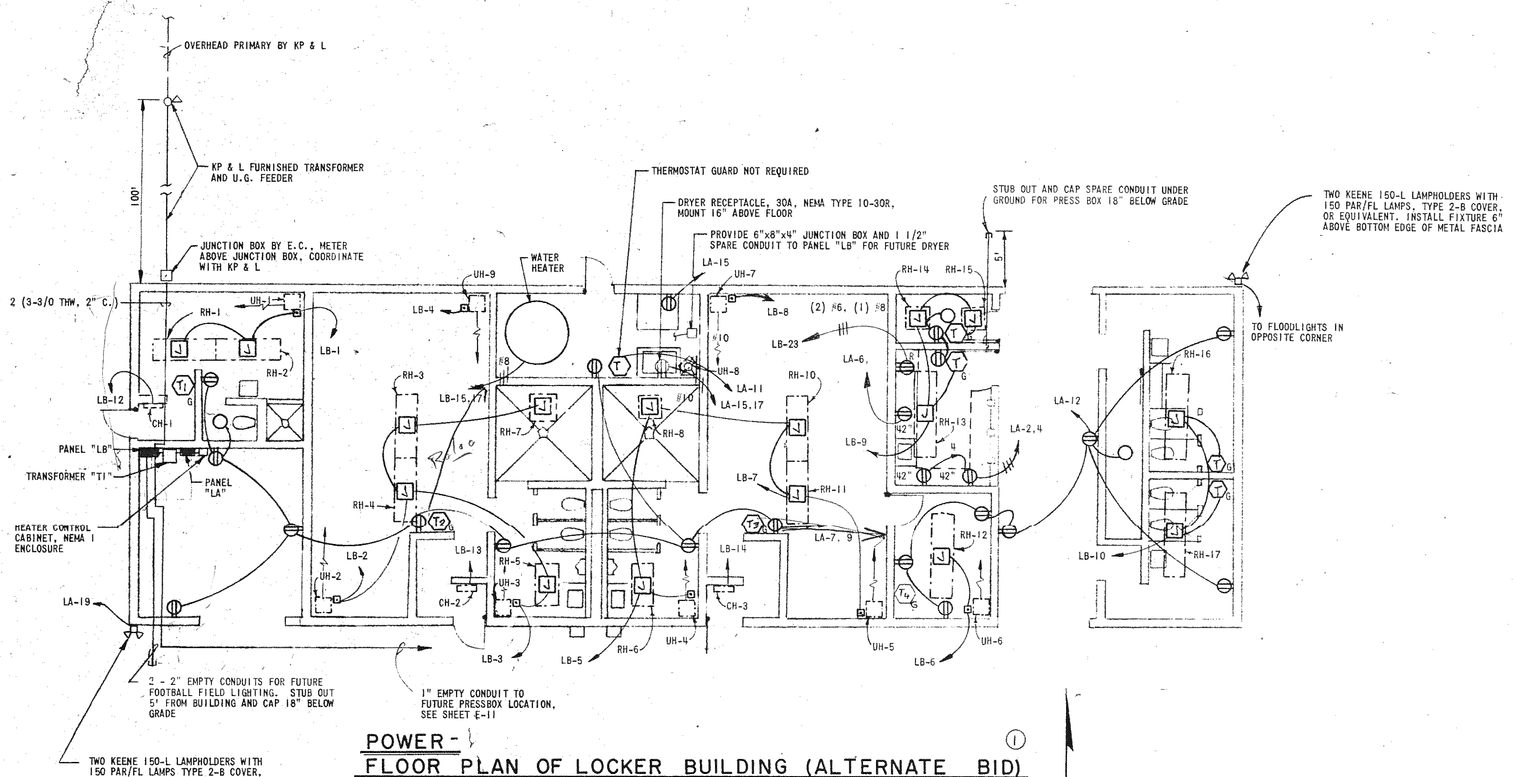

POWER - FLOOR PLAN OF LOCKER BUILDING (ALTERNATE BID) ①

1/8" = 1'-0"

NOTE:

⬡ G - SYMBOL INDICATES THERMOSTAT WITH LOCKING GUARD.

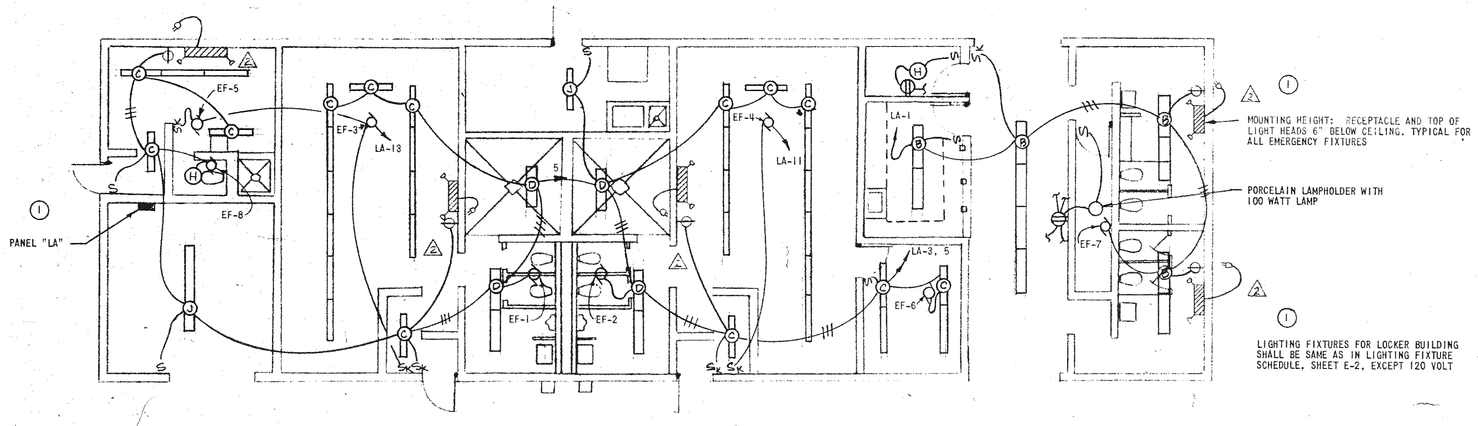

LIGHTING - FLOOR PLAN OF LOCKER BUILDING (ALTERNATE BID)

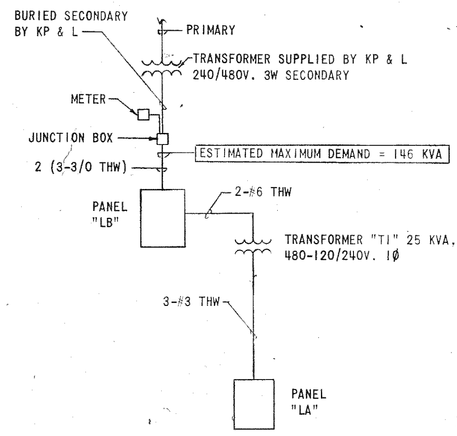

POWER SINGLE LINE DIAGRAM ①

1	CHANGE ORDER NO. 1	10/30/79	RLA
2	ADDENDUM NO. 2	28/9/79	MRE
	REVISION	DATE	BY

WILSON & COMPANY
SALINA KANSAS

ADDITION TO HIGH SCHOOL
UNIFIED SCHOOL DISTRICT #320
WAMEGO, KANSAS

LOCKER BUILDING - POWER AND LIGHTING FLOOR PLANS AND SCHEDULES

RONALD L. ANDERSON 6786 REGISTERED PROFESSIONAL ENGINEER STATE OF KANSAS

DESIGN	MRE
DRAWN	MLK
DATE	SEPT. 1979
FILE NO.	78-508
SHEET NO.	E-12 R

PANELBOARD "C" LOCATION 101 EMD = 77.4 KVA
FLUSH MOUNTED, 3Ø, 4W, 277/480V, 225A MAINS S/N

LOAD		LTG	REC	BKR	CKT	Ø	CKT	BKR	LTG	REC		
GYM	175	X		20	1	A	2	20	X		COMMONS	101
GYM	175	X		20	3	B	4	20	X		CORRIDOR	113
GYM	175	X		20	5	C	6	20	X		CORRIDOR	137
GYM	175	X		20	7	A	8	20	X		RECEPTION	103
GYM	175	X		20	9	B	10	20	X		LOUNGE	108
GYM	175	X		20	11	C	12	20	X		CLASS RM.	112
SHOP	138	X		20	13	A	14	20	X		CLOTHING	116
SHOP	138	X		20	15	B	16	20	X		HOME ECON.	117
SPARE				20	17	C	18	20	X		OFFICE PRACT.	134
ATHLETIC	150	X		20	19	A	20	20	X		BUSINESS	130
GIRLS P.E.	161	X		20	21	B	22	20	X		BEG. TYPING	129
KITCHEN	165	X		20	23	C	24	20	X		P.E. DECK	229
EQUIP. RM.	231	X		20	25	A	26	20	X		P.E. DECK	229
SPARE				20	27	B	28	20	X		P.E. DECK	229
SPARE					29	C	30	20	X		EPS1	231
					31	A	32	20	X		EXTERIOR LTG.	
FUTURE WASHER					33	B	34	20	X		EPS2	231
					35	C	36				SPACE	
					37		38					
					39		40					
					41		42					

PANELBOARD "D" LOCATION 224 EMD = 34.[illegible] KVA
FLUSH MOUNTED, 3Ø, 4W, 277/480V, 100 MAINS S/N

LOAD		LTG	REC	BKR	CKT	Ø	CKT	BKR	LTG	REC		
CLASSROOM	201	X		20	1	A	2	20	X		CLASSROOM	210
CLASSROOM	202	X		20	3	B	4	20	X		CLASSROOM	208
CLASSROOM	203	X		20	5	C	6	20	X		CLASSROOM	207
CLASSROOM	211	X		20	7	A	8	20	X		ARTS/CRAFTS	223
CLASSROOM	212	X		20	9	B	10	20	X		ARTS/CRAFTS	225
MEDIA	219	X		20	11	C	12	20	X		CORRIDORS	
SPARE				20	13	A	14	20	X		CORRIDORS	
SPARE				20	15	B	16	20	X		SPARE	
SPARE				20	17	C	18	20			SPARE	
					19	A	20					
					21	B	22					
					23	C	24					
					25	A	26					
					27	B	28					
					29	C	30					
					31	A	32					
					33	B	34					
					35	C	36					
					37	A	38					
					39	B	40					
					41	C	42					

PANELBOARD "E" LOCATION 124 EMD = 22.8 KVA
FLUSH MOUNTED, 3Ø 4W, 120/208V, 225A MAINS S/N

LOAD		LTG	REC	BKR	CKT	Ø	CKT	BKR	LTG	REC		
CLASSROOM	112		7	20	1	A	2	20		9	CORRIDOR	137
CLOTHING	116		6	20	3	B	4	20			130, 134, EF-16, EF-17	
CLOTHING	116		9	20	5	C	6	20		4	TYPING	129
EDF	113		1	15	7	A	8	20		5	TYPING	129
CORRIDOR	113		5	20	9	B	10	20		4	TYPING	129
VENDING	123A		2	20	11	C	12	20			RACEWAY	128
VENDING	123A		1	20	13	A	14	20		10	BUSINESS	130
VENDING	123A		1	20	15	B	16	20		11	BUSINESS	130
ELEVATOR CONT.	125		1	20	17	C	18	20		10	BUSINESS	130
UV-1 & 2, 112 & 116				20	19	A	20	20		12	OFF. PRACTICE	134
UV-3	117			15	21	B	22	20		14	OFF. PRACTICE	134
UV-4 & 5	129 & 130			20	23	C	24	20		12	OFF. PRACTICE	134
UV-6 FC-5	134			15	25	A	26	20	X		EQUIP. RM.	124
UV-10	138			15	27	B	28	20			SPARE	
SPARE				20	29	C	30	20			SPARE	
WASHER	143			20	31	A	32				SPACE	
DRYER	143			30	33	B	34				SPACE	
					35	C	36				SPACE	
					37		38					
					39		40					
					41		42					

PANELBOARD "F" LOCATION 224 EMD = 27.9 KVA
FLUSH MOUNTED, 3Ø, 4W, 120/208V, 225A MAINS S/N

LOAD		LTG	REC	BKR	CKT	Ø	CKT	BKR	LTG	REC		
SCIENCE, EF-7	201		5	20	1	A	2	20		8	CLASSROOM	208
SCIENCE	201, 202		6	20	3	B	4	20		7	CLASSROOM	203
SCIENCE, EF-8	202		5	20	5	C	6	20			EDF, EF-6	209
CLASSROOM	212		8	20	7	A	8	20		2	VENDING	213
CLASSROOM	211		8	20	9	B	10	20		1	VENDING	213
REMEDIAL READ. EF-11	217		8	20	11	C	12	20		1	VENDING	213
WORK RM.	221		8	20	13	A	14	20		1	ARTS	223
ARTS, EF-12	223		5	20	15	B	16	20		1	ARTS	223
ARTS	223		1	20	17	C	18	20		1	ARTS	223
ARTS	223		1	20	19	A	20	20		1	ARTS	223
ARTS	223		1	20	21	B	22	20		1	ARTS	223
CLAY/KILN	225		1	20	23	C	24	20		1	ARTS	225
CLAY/KILN	226		1	20	25	A	26	20		1	ARTS	225
CLAY/KILN	226		1	20	27	B	28	20			UV-12&13	201&202
CLAY/KILN	226		1	20	29	C	30	20			UV-14&15	203&207
EF-10, 13				15	31	A	32	20			UV-16&17	206&210
SPARE				20	33	B	34	20			UV-18&19	211&212
SPARE				20	35	C	36	20			UV-7 & 8	219&223
SPARE				20	37	A	38	15			UV-9 & FC-6	225
KILN	226		1	50	39	B	40	50	1		KILN	226
						C						

PANELBOARD "G" LOCATION 124 EMD = 32.[illegible] KVA
SURFACE MOUNTED, 3Ø, 4W, 120/208V, 225A MAINS S/N

LOAD		LTG	REC	BKR	CKT	Ø	CKT	BKR	LTG	REC		
COUNTER TOP	118		1	20	1	A	2	20		1	COUNTER TOP	118
COUNTER TOP	118		1	20	3	B	4	20		1	COUNTER TOP	118
COUNTER TOP	118		1	20	5	C	6	20		1	REFRIGERATOR	118
COUNTER TOP	118		1	20	7	A	8	20		1	RANGE	118
COUNTER TOP, EF-9	118		2	20	9	B	10	20		1	RANGE	118
COUNTER TOP	118		1	20	11	C	12	20		1	WASHER	117
COUNTER TOP	118		1	20	13	A	14	20			SPARE	
REFRIGERATOR	118		1	20	15	B	16	20			SPARE	
COUNTER TOP	118		2	20	17	C	18	20			SPARE	
COUNTER TOP	118		1	20	19	A	20	20			SPARE	
SPACE					21	B	22	20			SPACE	
SPACE					23	C	24				SPACE	
SPACE					25	A	26				SPACE	
OVEN	118			50	27	B	28				SPACE	
						C	30				SPACE	
RANGE	118			50	29	A	32	30			DRYER	118
						B						
RANGE TOP	118			50	31	C	34	50			RANGE	118
						A						
RANGE	118			50	33	B	36	50			RANGE	118
						C						

PANELBOARD "H" LOCATION RM. 101 EMD = [illegible].5 KVA
FLUSH MOUNTED, 3Ø, 4W, 120/208V, 225A MAINS S/N

LOAD		LTG	REC	BKR	CKT	Ø	CKT	BKR	LTG	REC		
EDF	101		2	20	1	A	2	20		9	OFFICE	104
COMMONS	101		2	20	3	B	4	20		9	OFFICE	102
EDF	113		1	15	5	C	6	20		7	WORK RM.	106
LOUNGE	108		7	20	7	A	8	20		5	GYM	175
EXTERIOR			4	20*	9	B	10	20		1	SCOREBOARD	175
LOCKER RM.			8	20	11	C	12	20		4	GYM	175
LOCKER RM.			8	20	13	A	14	20		1	SCOREBOARD	175
UV-22	101			15	15	B	16	20		1	SCORES TABLE	175
UV-21	101			15	17	C	18	15			UV-11 & 23	108
UV-20	101			15	19	A	20	*20		1	WHIRLPOOL	153
WRESTLING	229		7	20	21	B	22	*20		1	WHIRLPOOL	154
FC-1, 2, 3, 4	141			15	23	C	24	20			AMPLIFIER SPARE	
170, 171, 172, EF-14, EF-15		X	1	15	25	A	26	20			SPARE	
SPARE				20	27	B	28	20			SPARE	
SPARE				20	29	C	30	20			SPARE	
(1) SPARE						A					SPACE	
(1) SPARE						B					SPACE	
(1) SPARE						C					SPACE	
(1) SPARE						A					SPACE	
(1) SPARE						B					SPACE	
(1) SPARE						C	42				SPACE	

(*) GROUND FAULT INTERRUPTING TYPE BREAKER

PANELBOARD "J" LOCATION 138 EMD = [illegible].7 KVA
FLUSH MOUNTED, 1Ø 3W, 120/240V, 225A MAINS S/N

LOAD		LTG	REC	BKR	CKT	Ø	CKT	BKR	LTG	REC		
SHOP REC.	138		2	20	1	A	2	20		1	SANDER	(1)
SHOP REC.	138		2	20	3	B	4	20		1	MITER BOX	(3)
BAND SAW	(4)		1	20	5	A	6	20		1	GRINDER	(2)
DRILL PRESS	(5)		1	20	7	B	8	20		1	RADIAL ARM	(7)
LATHE	(6)		1	20	9	A	10	20		2	REEL	(10)
EDF	138		1	15	11	B	12	20		2	REEL	(10)
SHOP REC.	138		1	20	13	A	14	20		2	REEL	(10)
SHOP REC.	138		2	20	15	B	16	20		2	REEL	(10)
OFFICE	139		5	20	17	A	18	20			SPARE	
SPARE				20	19	B	20	20			SPARE	
SPARE				20	21	A	22	20			SPARE	
SPACE					23	B	24				SPACE	
SPACE					25	A	26				SPACE	
SPACE					27	B	28				SPACE	
JOINTER				20	29	A	30	30			TABLE SAW	(8)
						B						
					33		34					
					35		36					
					37		38					
					39		40					
					41		42					

PANELBOARD "K" LOCATION 168 EMD = 76.8 KVA
FLUSH MOUNTED, 3Ø, 4W, 277/480V, 225A MAINS S/N

LOAD		LTG	REC	BKR	CKT	Ø	CKT	BKR	LTG	REC		
						A						
DISPOSER	(7)			15	1	B	2	20			CONVECTION OVEN	(12)
						C						
						A						
KETTLE	(14)			40	3	B	4	20			CONVECTION OVEN	(12)
						C						
						A						
FRY PAN	(15)			30	5	B	6	15			DISPOSER	(28) a
						C						
						A						
DISPOSER	(35)			15	7	B	8	15			CUTTER/MIXER	(28) b
						C						
						A						
TANK HEATER	(36)			30	9	B	10	15			DISHWASHER	(36) a
						C						
						A						
STEAM GENERATOR				60	11	B	12	20			SPARE	
						C						
						A						
SPACE					13	B	14				SPACE	
						C						

PANELBOARD "L" LOCATION 168 EMD = [illegible].5 KVA
FLUSH MOUNTED, 3Ø, 4W, 120/208V, 225A MAINS S/N

LOAD		LTG	REC	BKR	CKT	Ø	CKT	BKR	LTG	REC		
DOOR LIGHT & HEATER				20	1	A	2	20			KETTLE & FRY PAN	
DOOR LIGHT & HEATER				20	3	B	4	20			STEAMER CONTROLS	
MIXER				20	5	C	6	20			PROOF CABINET	
REFRIGERATOR				20	7	A	8	20		2	WORKTABLE	
HOT CABINET				30	9	B	10	20		2	WORKTABLE	
REFRIGERATOR				20	11	C	12	20		1	WORKTABLE	
SERVING COUNTER				20	13	A	14	20		2	WORKTABLE	
SERVING COUNTER				20	15	B	16	20			MILK CABINET	
DETERGENT DISPENSER				20	17	C	18	20		1	PORTABLE CART	
PORTABLE CART			1	20	19	A	20	20		1	PORTABLE CART	
PORTABLE CART			1	20	21	B	22	20		1	PORTABLE CART	
RECEIVING			1	20	23	C	24	20		1	PORTABLE CART	
TOILET			1	20	25	A	26	20		1	CONCESSION	
OFFICE			6	20	27	B	28	20		1	CONCESSION	
CONCESSIONS			2	20	29	C	30	20		1	CONCESSION	
CONCESSIONS			2	20	31	A	32	20		1	CONCESSION	
CONCESSIONS				20	33	B	34	15			FIRE PROTECTION SYSTEM	
CONCESSIONS				20	35	C	36	15			ICE MACHINE	
EDF				15	37	A	38	20	X		EXH. HOOD LIGHTS	
SPARE				20	39	B	40	20			SPARE	
SPARE				20	41	C	42	20			SPARE	

PANELBOARD "M" LOCATION 124 EMD = KVA
FLUSH MOUNTED, 3Ø, 4W, 120/208, 600A MAIN BREAKER S/N

LOAD		LTG	REC	BKR	CKT	Ø	CKT	BKR	LTG	REC		
						A						
PANEL "E"				80	1	B	2	110			PANEL "F"	
						C						
						A						
PANEL "G"				150	3	B	4				SPACE	
						C						
						A						
SPACE					5	B	6				SPACE	
						C						
						A						
					7	B	8					
						C						
						A						
					9	B	10					
						C						
						A						
					11	B	12					
						C						
						A						
					13	B	14					
						C						

PANELBOARD "N" LOCATION 231 EMD = KVA
SURFACE MOUNTED, 3Ø, 4W, 120/208V, 400A MAIN BREAKER S/N

LOAD		LTG	REC	BKR	CKT	Ø	CKT	BKR	LTG	REC		
						A						
PANEL "H"				60	1	B	2	60			PANEL "L"	
						C						
						A	4	20			HCP-1, HCP-2	231
PANEL "P"				250	3	B	6	15			AIR DRYER	231
						C	8	20		2		231
SF-1	ROOF			15	5	A	10	20		2		231
SPARE				20	7	B	12	15			TIME CLOCK (TEMP. CONT.)	231
SPARE				20	9	C	14				SPACE	
SPACE					11	A	16				SPACE	
SPACE					13	B	18				SPACE	
SPACE					15	C	20				SPACE	
					25		26					
					27		28					
					29		30					
					31		32					
					33		34					
					35		36					
					37		38					
					39		40					
					41		42					

PANELBOARD "P" LOCATION 168 EMD = 38.8 KVA
FLUSH MOUNTED, 3Ø, 4W, 120/208V, 225A MAINS S/N

LOAD		LTG	REC	BKR	CKT	Ø	CKT	BKR	LTG	REC		
				60		A						
FRYER					1	B	2	15			CONDENSING UNIT	
						C					(FREEZER)	
						A						
FRYER				60	3	B	4	15			DEFROST HTR.	
						C					(FREEZER)	
						A						
STACK OVEN				70	5	B	6	15			CONDENSING UNIT	
						C					(REFRIGERATOR)	
						A						
MIXER				15	7	B	8	15			SERVING COUNTER	
						C						
						A						
RANGE				70	9	B	10	15			SPARE	
						C						
						A						
SPACE					11	B	12				SPACE	
						C						

REVISION	DATE	BY
(1) CHANGE ORDER NO. 1	10-31-79	WDB
(2) ADDENDUM NO. 2	28/9/79	MRE

WILSON & COMPANY
SALINA KANSAS

ADDITION TO HIGH SCHOOL
UNIFIED SCHOOL DISTRICT #320
WAMEGO, KANSAS
PANELBOARD SCHEDULES

RODNEY L. ANDERSON LICENSED 6785 KANSAS PROFESSIONAL ENGINEER

DESIGN RLA
DRAWN WDB
DATE SEPT 1979
FILE NO. 78-508
SHEET NO. E-13R

PANELBOARD "C" LOCATION 101 EMD = 77.4 KVA
FLUSH MOUNTED, 3ø, 4W, 277/480V, 225A MAINS

LOAD		LTG	REC	BKR	CKT	ø	CKT	BKR	LTG	REC	
GYM	175	X		20	1	A	2	20	X		COMMONS 101
GYM	175	X		20	3	B	4	20	X		CORRIDOR 113
GYM	175	X		20	5	C	6	20	X		CORRIDOR 137
GYM	175	X		20	7	A	8	20	X		RECEPTION 103
GYM	175	X		20	9	B	10	20	X		LOUNGE 108
GYM	175	X		20	11	C	12	20	X		CLASS RM. 112
SHOP	138	X		20	13	A	14	20	X		CLOTHING 116
SHOP	138	X		20	15	B	16	20	X		HOME ECON. 117
SPARE				20	17	C	18	20	X		OFFICE PRACT. 134
ATHLETIC	150	X		20	19	A	20	20	X		BUSINESS 130
GIRLS P.E.	161	X		20	21	B	22	20	X		BEG. TYPING 129
KITCHEN	165	X		20	23	C	24	20	X		P.E. DECK 229
EQUIP. RM.	231	X		20	25	A	26	20	X		P.E. DECK 229
SPARE				20	27	B	28	20	X		P.F. DECK 229
SPARE					29	C	30	40			EMERG. POWER 101
					31	A	32	20	X		EXTERIOR LTG.
FUTURE WASHER					33	B	34				SPACE
					35	C	36				SPACE
					37		38				
					39		40				
					41		42				

PANELBOARD "D" LOCATION 224 EMD = 34.2 KVA
FLUSH MOUNTED, 3ø, 4W, 277/480V, 100 MAINS

LOAD		LTG	REC	BKR	CKT	ø	CKT	BKR	LTG	REC	
CLASSROOM	201	X		20	1	A	2	20	X		CLASSROOM 210
CLASSROOM	202	X		20	3	B	4	20	X		CLASSROOM 208
CLASSROOM	203	X		20	5	C	6	20	X		CLASSROOM 207
CLASSROOM	211	X		20	7	A	8	20	X		ARTS/CRAFTS 223
CLASSROOM	212	X		20	9	B	10	20	X		ARTS/CRAFTS 225
MEDIA	219	X		20	11	C	12	20	X		CORRIDORS
SPARE				20	13	A	14	20	X		CORRIDORS
SPARE				20	15	B	16	20	X		SPARE
SPARE				20	17	C	18	20			SPARE
					19	A	20				
					21	B	22				
					23	C	24				
					25	A	26				
					27	B	28				
					29	C	30				
					31	A	32				
					33	B	34				
					35	C	36				
					37	A	38				
					39	B	40				
					41	C	42				

PANELBOARD "E" LOCATION 124 EMD = 22.8 KVA
FLUSH MOUNTED, 3ø, 4W, 120/208V, 225A MAINS

LOAD		LTG	REC	BKR	CKT	ø	CKT	BKR	LTG	REC	
CLASSROOM	112		7	20	1	A	2	20		9	CORRIDOR 137
CLOTHING	116		6	20	3	B	4	20		8	TYPING 130
CLOTHING	116		9	20	5	C	6	20		4	TYPING 129
EDF	113		1	15	7	A	8	20		5	TYPING 129
CORRIDOR	113		5	20	9	B	10	20		4	TYPING 129
VENDING	123A		2	20	11	C	12	20			RACEWAY 128
VENDING	123A		1	20	13	A	14	20		10	BUSINESS 130
VENDING	123A		1	20	15	B	16	20		11	BUSINESS 130
ELEVATOR			1	20	17	C	18	20		10	BUSINESS 130
UV-1 & 2	112 & 116			20	19	A	20	20		12	OFF. PRACTICE 134
UV-3	117			15	21	B	22	20		14	OFF. PRACTICE 134
UV-4 & 5	129 & 130			20	23	C	24	20		12	OFF. PRACTICE 134
UV-6	FC-5 134			15	25	A	26	20	X		EQUIP. RM. 124
UV-10	138			15	27	B	28	20			SPARE
SPARE				20	29	C	30	20			SPARE
WASHER	143			20	31	A	32				SPACE
DRYER	143			30	33	B	34				SPACE
						C	36				
					37		38				
					39		40				
					41		42				

PANELBOARD "F" LOCATION 224 EMD = 27.9 KVA
FLUSH MOUNTED, 3ø, 4W, 120/208V, 225A MAINS

LOAD		LTG	REC	BKR	CKT	ø	CKT	BKR	LTG	REC	
SCIENCE	201		5	20	1	A	2	20		8	CLASSROOM 208
SCIENCE	201, 202		6	20	3	B	4	20		7	CLASSROOM 203
SCIENCE	202		5	20	5	C	6	20		2	EDF 209
CLASSROOM	212		8	20	7	A	8	20		2	VENDING 213
CLASSROOM	211		8	20	9	B	10	20		1	VENDING 213
REMEDIAL READ.	217		8	20	11	C	12	20		1	VENDING 213
WORK RM.	221		8	20	13	A	14	20		1	ARTS 223
ARTS	223		5	20	15	B	16	20		1	ARTS 223
ARTS	223		1	20	17	C	18	20		1	ARTS 223
ARTS	223		1	20	19	A	20	20		1	ARTS 223
ARTS	223		1	20	21	B	22	20		1	ARTS 223
CLAY/KILN	226		1	20	23	C	24	20		1	ARTS 225
CLAY/KILN	226		1	20	25	A	26	20			UV-12&13 201&202
CLAY/KILN	226		1	20	27	B	28	20			UV-14&15 203&207
CLAY/KILN	226		1	20	29	C	30	20			UV-16&17 208&210
EF-10, 13				20	31	A	32	20			UV-18&19 211&212
SPARE				20	33	B	34	20			UV-7 & 8 213&223
SPARE				20	35	C	36	20			UV-9 & FC-6 225
SPARE				20	37	A	38	15			KILN 226
KILN	226		1	50	39	B	40	50	1		
						C					

PANELBOARD "G" LOCATION 124 EMD = 32.9 KVA
SURFACE MOUNTED, 3ø, 4W, 120/208V, 225A MAINS

LOAD		LTG	REC	BKR	CKT	ø	CKT	BKR	LTG	REC	
COUNTER TOP	118		1	20	1	A	2	20		1	COUNTER TOP 118
COUNTER TOP	118		1	20	3	B	4	20		1	COUNTER TOP 118
COUNTER TOP	118		1	20	5	C	6	20		1	REFRIGERATOR 118
COUNTER TOP	118		1	20	7	A	8	20		1	RANGE 118
COUNTER TOP	118		2	20	9	B	10	20		1	RANGE 118
COUNTER TOP	118		1	20	11	C	12	20		1	WASHER 117
COUNTER TOP	118		1	20	13	A	14	20			SPARE
REFRIGERATOR	118		1	20	15	B	16	20			SPARE
COUNTER TOP	118		2	20	17	C	18	20			SPARE
COUNTER TOP	118		1	20	19	A	20	20			SPARE
SPACE					21	B	22	20			SPACE
SPACE					23	C	24				SPACE
SPACE					25	A	26				SPACE
OVEN	118			50	27	B	28				SPACE
						C	30				SPACE
RANGE	118			50	29	A	32	30			DRYER 118
						B					
RANGE TOP	118			50	31	C	34	50			RANGE 118
						A					
RANGE	118			50	33	B	36	50			RANGE 118
						C					

PANELBOARD "H" LOCATION RM. 101 EMD = 15.5 KVA
FLUSH MOUNTED, 3ø, 4W, 120/208V, 225A MAINS

LOAD		LTG	REC	BKR	CKT	ø	CKT	BKR	LTG	REC	
EDF	101		2	20	1	A	2	20		9	OFFICE 104
COMMONS	101		2	20	3	B	4	20		9	OFFICE 102
EDF	113		1	15	5	C	6	20		7	WORK RM. 106
LOUNGE	108		7	20	7	A	8	20		5	GYM 175
EXTERIOR			4	20	9	B	10	20		1	SCOREBOARD 175
LOCKER RM.			8	20	11	C	12	20		4	GYM 175
LOCKER RM.			8	20	13	A	14	20		1	SCOREBOARD 175
UV-22	101			15	15	B	16	20		1	SCORES TABLE 175
UV-21	101			15	17	C	18	15			UV-11 108
UV-20	101			15	19	A	20	20		1	WHIRLPOOL 153
WRESTLING	229		7	20	21	B	22	20		1	WHIRLPOOL 154
FINISH RM.	141			20	23	C	24	20			PUMP 231
		X		20	25	A	26	20			AIR DRYER 231
SPARE				20	27	B	28	20			SPARE
SPARE				20	29	C	30	20			SPARE

(36) GROUND FAULT INTERRUPTING TYPE BREAKER

PANELBOARD "J" LOCATION 138 EMD = 25.7 KVA
FLUSH MOUNTED, 1ø 3W, 120/240V, 225A MAINS

LOAD		LTG	REC	BKR	CKT	ø	CKT	BKR	LTG	REC	
SHOP REC.	138		2	20	1	A	2	20		1	SANDER (1)
SHOP REC.	138		2	20	3	B	4	20		1	MITER BOX (3)
BAND SAW	(4)		1	20	5	A	6	20		1	GRINDER (2)
DRILL PRESS	(5)		1	20	7	B	8	20		1	RADIAL ARM (7)
LATHE	(6)		1	20	9	A	10	20		2	REEL (10)
EDF	138		1	15	11	B	12	20		2	REEL (10)
SHOP REC.	138		1	20	13	A	14	20		2	REEL (10)
SHOP REC.	138		2	20	15	B	16	20		2	REEL (10)
OFFICE	139		5	20	17	A	18	20			SPARE
SPARE				20	19	B	20	20			SPARE
SPARE				20	21	A	22	20			SPARE
SPACE					23	B	24				SPACE
SPACE					25	A	26				SPACE
SPACE					27	B	28				SPACE
JOINTER				20	29	A	30	30			TABLE SAW (8)
						B					
					33		34				
					35		36				
					37		38				
					39		40				
					41		42				

PANELBOARD "K" LOCATION 168 EMD = 76.8 KVA
FLUSH MOUNTED, 3ø, 4W, 480V, 225A MAINS

LOAD		LTG	REC	BKR	CKT	ø	CKT	BKR	LTG	REC	
						A					
DISPOSER	(7)			15	1	B	2	20			CONVECTION OVEN (12)
						C					
						A					
KETTLE	(14)			40	3	B	4	20			CONVECTION OVEN (12)
						C					
						A					
FRY PAN	(15)			30	5	B	6	15			DISPOSER (28)a
						C					
						A					
DISPOSER	(35)			15	7	B	8	15			CUTTER/MIXER (28)b
						C					
						A					
TANK HEATER	(36)			30	9	B	10	15			DISHWASHER (36)a
						C					
						A					
SPARE				20	11	B	12	20			SPARE
						C					
						A					
SPACE					13	B	14				SPACE
						C					

PANELBOARD "L" LOCATION 168 EMD = 17.5 KVA
FLUSH MOUNTED, 3ø, 4W, 120/208V, 225A MAINS

LOAD		LTG	REC	BKR	CKT	ø	CKT	BKR	LTG	REC	
REFRIGERATOR				20	1	A	2	20			KETTLE & FRY PAN
FREEZER				20	3	B	4	20			STEAMER CONTROLS
MIXER				20	5	C	6	20			PROOF CABINET
REFRIGERATOR				20	7	A	8	20		2	WORKTABLE
HOT CABINET				30	9	B	10	20		2	WORKTABLE
REFRIGERATOR				20	11	C	12	20		1	WORKTABLE
SERVING COUNTER				20	13	A	14	20		2	WORKTABLE
SERVING COUNTER				20	15	B	16	20			MILK CABINET
DETERGENT DISPENSER				20	17	C	18	20		1	PORTABLE CART
PORTABLE CART			1	20	19	A	20	20		1	PORTABLE CART
PORTABLE CART			1	20	21	B	22	20		1	PORTABLE CART
RECEIVING			1	20	23	C	24	20		1	PORTABLE CART
TOILET			1	20	25	A	26	20		1	CONCESSION
OFFICE			6	20	27	B	28	20		1	CONCESSION
CONCESSIONS			2	20	29	C	30	20		1	CONCESSION
CONCESSIONS			2	20	31	A	32	20		1	CONCESSION
CONCESSIONS				20	33	B	34	30			FIRE PROTECTION SYSTEM
CONCESSIONS				20	35	C	36	15			ICE MACHINE
EDF				15	37	A	38	20	X		EXH. HOOD LIGHTS
SPARE				20	39	B	40	20			SPARE
SPARE				20	41	C	42	20			SPARE

PANELBOARD "M" LOCATION 231 EMD = 65.5 KVA
SURFACE MOUNTED, 3ø, 4W, 277/480V, 225A MAINS

LOAD		LTG	REC	BKR	CKT	ø	CKT	BKR	LTG	REC	
						A					
MAKE-UP AIR HEATER				15	1	B	2	20			DUST COLLECTOR
RM. 138						C					
						A					
AIR COMPRESSOR	138			15	3	B	4	15			EF-2
						C					
						A					
AHU-1	175			15	5	B	6	15			AHU-2 175
						C					
						A					
AHU-3	175			15	7	B	8	15			AHU-4 175
						C					
						A					
AHU-5	229			15	9	B	10	20			EF-1, 3, 4 & 5
						C					
						A					
PUMP	231			20	11	B	12	15			AHU-6 231
						C					
						A					
PUMP	231			20	13	B	14	15			CONTROL AIR COMP.
STAND-BY						C					RM. 231

PANELBOARD "N" LOCATION 231 EMD = KVA
SURFACE MOUNTED, ø, W, V, MAINS

LOAD		LTG	REC	BKR	CKT	ø	CKT	BKR	LTG	REC	
					1	A	2				
					3	B	4				
					5	C	6				
					7	A	8				
					9	B	10				
					11	C	12				
					13	A	14				
					15	B	16				
					17	C	18				
					19		20				
					21		22				
					23		24				
					25		26				
					27		28				
					29		30				
					31		32				
					33		34				
					35		36				
					37		38				
					39		40				
					41		42				

PANELBOARD "P" LOCATION 168 EMD = 38.8 KVA
FLUSH MOUNTED, 3ø 3W, 208V, 225A MAINS

LOAD		LTG	REC	BKR	CKT	ø	CKT	BKR	LTG	REC	
						A					
FRYER				30	1	B	2	15			CONDENSING UNIT
						C					(FREEZER)
						A					
FRYER				30	3	B	4	15			DEFROST HTR.
						C					(FREEZER)
						A					
STACK OVEN				30	5	B	6	15			CONDENSING UNIT
						C					(REFRIGERATOR)
						A					
MIXER				15	7	B	8	15			SERVING COUNTER
						C					
						A					
RANGE				30	9	B	10	15			SPARE
						C					
						A					
SPACE					11	B	12				SPACE
						C					

WILSON & COMPANY
SALINA KANSAS

REVISION

ADDITION TO HIGH SCHOOL
UNIFIED SCHOOL DISTRICT #320
WAMEGO, KANSAS
PANELBOARD SCHEDULES

DESIGN	RLA
DRAWN	WDB
DATE	SEPT. 1979
FILE NO.	78-508
SHEET NO.	E-13

2 PANELBOARD "C" LOCATION 101 EMD = 77.4 KVA
FLUSH MOUNTED, 30, 4W, 277/480V, 225A MAINS S/N

LOAD		LTG	REC	BKR	CKT	Ø	CKT	BKR	LTG	REC	LOAD
GYM	175	X		20	1	A	2	20	X		COMMONS 101
GYM	175	X		20	3	B	4	20	X		CORRIDOR 113
GYM	175	X		20	5	C	6	20	X		CORRIDOR 137
GYM	175	X		20	7	A	8	20	X		RECEPTION 103
GYM	175	X		20	9	B	10	20	X		LOUNGE 108
GYM	175	X		20	11	C	12	20	X		CLASS RM. 112
SHOP	138	X		20	13	A	14	20	X		CLOTHING 116
SHOP	138	X		20	15	B	16	20	X		HOME ECON. 117
SPARE				20	17	C	18	20	X		OFFICE PRACT. 134
ATHLETIC	150	X		20	19	A	20	20	X		BUSINESS 130
GIRLS P.E.	161	X		20	21	B	22	20	X		BEG. TYPING 129
KITCHEN	165	X		20	23	C	24	20	X		P.E. DECK 229
EQUIP. RM.	231	X		20	25	A	26	20	X		P. E. DECK 229
SPARE				20	27	B	28	20	X		P.E. DECK 229
SPARE				20	29	C	30	20	X		EPS1 231
					31	A	32	20	X		EXTERIOR LTG.
FUTURE WASHER					33	B	34	20	X		EPS2 231
					35	C	36				SPACE
					37	A	38				
					39	B	40				
					41	C	42				

2 PANELBOARD "G" LOCATION 124 EMD = 32.4 KVA
SURFACE MOUNTED, 30, 4W, 120/208V, 225A MAINS S/N

LOAD		LTG	REC	BKR	CKT	Ø	CKT	BKR	LTG	REC	LOAD
COUNTER TOP	118		1	20	1	A	2	20		1	COUNTER TOP 118
COUNTER TOP	118		1	20	3	B	4	20		1	COUNTER TOP 118
COUNTER TOP	118		1	20	5	C	6	20		1	REFRIGERATOR 118
COUNTER TOP	118		1	20	7	A	8	20		1	RANGE 118
COUNTER TOP, EF-9	118		2	20	9	B	10	20		1	RANGE 118
COUNTER TOP	118		1	20	11	C	12	20		1	WASHER 117
COUNTER TOP	118		1	20	13	A	14	20		1	SPARE 118
REFRIGERATOR	118		1	20	15	B	16	20		1	SPARE 118
COUNTER TOP	118		2	20	17	C	18	20		1	SPARE 108
COUNTER TOP	118		1	20	19	A	20	20		1	SPARE 153
SPACE					21	B	22	20		1	SPACE 154
SPACE					23	C	24			1	SPACE
SPACE					25	A	26			1	SPACE
OVEN	118			50	27	B	28			1	SPACE
						C	30			1	SPACE
RANGE	116			50	29	A	32	30		1	DRYER 118
						B				1	
RANGE TOP	118			50	31	C	34	50		1	RANGE 118
						A				1	
RANGE	118			50	33	B	36	50		1	RANGE 118
						C				1	

2 PANELBOARD "L" LOCATION 168 EMD = 45.5 KVA
FLUSH MOUNTED, 30, 4W, 120/208, 225A MAINS S/N

LOAD		LTG	REC	BKR	CKT	Ø	CKT	BKR	LTG	REC	LOAD
DOOR LIGHT & HEATER	20	1		20	1	A	2	20		1	KETTLE & FRY PAN
DOOR LIGHT & HEATER	20	3		20	3	B	4	20			STEAMER CONTROLS
MIXER	20	5		20	5	C	6	20			PROOF CABINET
REFRIGERATOR	20	7		20	7	A	8	20		2	WORKTABLE
HOT CABINET	30	9		20	9	B	10	20		2	WORKTABLE
REFRIGERATOR	20	11		20	11	C	12	20		1	WORKTABLE
SERVING COUNTER	20	13		20	13	A	14	20		2	WORKTABLE
SERVING COUNTER	20	15		20	15	B	16	20		1	MILK CABINET
DETERGENT DISPENSER	20	17		20	17	C	18	20		1	PORTABLE CART
PORTABLE CART	20	19		20	19	A	20	20		1	PORTABLE CART
PORTABLE CART	20	21		20	21	B	22	20		1	PORTABLE CART
RECEIVING	20	23		20	23	C	24	20		1	PORTABLE CART
TOILET	20	25		20	25	A	26	20		1	CONCESSION
OFFICE	20	27		20	27	B	28	20		1	CONCESSION
CONCESSIONS	20	29		20	29	C	30	20		1	CONCESSION
CONCESSIONS	20	31		20	31	A	32	20		1	CONCESSION
CONCESSIONS	20	33		20	33	B	34	15		1	FIRE PROTECTION SYSTEM
CONCESSIONS	20	35		20	35	C	36	15		1	ICE MACHINE
EDF	15	37		20	37	A	38	20	X		EXH. HOOD LIGHTS
SPARE	20	39		20	39	B	40	20	X		SPARE
SPARE	20	41		20	41	C	42	20			SPARE

2 PANELBOARD "D" LOCATION 224 EMD = 34.2 KVA
FLUSH MOUNTED, 30, 4W, 277/480V, 150 MAINS S/N

LOAD		LTG	REC	BKR	CKT	Ø	CKT	BKR	LTG	REC	LOAD
CLASSROOM	201	X		20	1	A	2	20	X		CLASSROOM 210
CLASSROOM	202	X		20	3	B	4	20	X		CLASSROOM 208
CLASSROOM	203	X		20	5	C	6	20	X		CLASSROOM 207
CLASSROOM	211	X		20	7	A	8	20	X		ARTS/CRAFTS 223
CLASSROOM	212	X		20	9	B	10	20	X		ARTS/CRAFTS 225
MEDIA	219	X		20	11	C	12	20	X		CORRIDORS
SPARE				20	13	A	14	20	X		CORRIDORS
SPARE				20	15	B	16	20	X		SPARE
SPARE				20	17	C	18	20			SPARE
					19	A	20				
					21	B	22				
					23	C	24				
					25	A	26				
					27	B	28				
					29	C	30				
					31	A	32				
					33	B	34				
					35	C	36				
					37	A	38				
					39	B	40				
					41	C	42				

2 PANELBOARD "H" LOCATION RM. 101 EMD = 25.5 KVA
FLUSH MOUNTED, 30, 4W, 120/208V, 225A MAINS S/N

LOAD		LTG	REC	BKR	CKT	Ø	CKT	BKR	LTG	REC	LOAD
EDF	101		2	20	1	A	2	20		9	OFFICE 104
COMMONS	101		2	20	3	B	4	20		9	OFFICE 102
EDF	113		1	15	5	C	6	20		7	WORK RM. 105
LOUNGE	108		7	20	7	A	8	20		5	GYM 175
EXTERIOR		4	20		9	B	10	20		1	SCOREBOARD 175
LOCKER RM.		8	20		11	C	12	20		4	GYM 175
LOCKER RM.		6	20		13	A	14	20		1	SCOREBOARD 175
UV-22	101			15	15	B	16	20		1	SCORES TABLE 175
UV-21	101			15	17	C	18	15			UV-11 & 23 108
UV-20	101			15	19	A	20	20		1	WHIRLPOOL 153
		229			21	B	22	20		1	WHIRLPOOL 154
FC-1,2,3,4	141			15	23	C	24	20		1	SPARE
170,171,172, EF-14,		X	1	15	25	A	26	20			SPARE
EF-15											SPACE
SPARE				20	27	B	28	20			SPACE
SPARE				20	29	C	30	20			SPACE
											SPARE
											SPACE

2 PANELBOARD "J" LOCATION 138 EMD = 27.7 KVA
FLUSH MOUNTED, 30, 3W, 120/240V, 225A MAINS S/N

LOAD		LTG	REC	BKR	CKT	Ø	CKT	BKR	LTG	REC	LOAD
SHOP REC.	138		2	20	1	A	2	20		1	SANDER (1)
SHOP REC.	138		2	20	3	B	4	20		1	MITER BOX (3)
BAND SAW (4)			1	20	5	A	6	20		1	GRINDER (2)
DRILL PRESS (5)			1	20	7	B	8	20		1	RADIAL ARM (7)
LATHE (6)			1	20	9	A	10	20		2	REEL (10)
EDF	138		1	15	11	B	12	20		2	REEL (9)
SHOP REC.	138		1	20	13	A	14	20		2	REEL (10)
S-SHOP REC.	138		2	20	15	B	16	20		2	REEL (10)
OFFICE	139		5	20	17	A	18	20			SPARE
SPARE				20	19	B	20	20			SPARE
SPACE				20	21	A	22	20			SPARE
SPACE					23	B	24				SPACE
SPACE					25	A	26				SPACE
SPACE					27	B	28				SPACE
JOINTER		20		20	29	A	30	30			TABLE SAW (8)
						B					
		33			33		34				SPACE
		37			35		36				SPACE
		39			37		38				SPACE
		41			39		40				SPACE
					41		42				

2 PANELBOARD "E" LOCATION 124 EMD = 22.8 KVA
FLUSH MOUNTED, 30, 4W, 120/208V, 225A MAINS S/N

LOAD		LTG	REC	BKR	CKT	Ø	CKT	BKR	LTG	REC	LOAD
CLASSROOM	112		7	20	1	A	2	20		9	CORRIDOR 137
CLOTHING	116		6	20	3	B	4	20			130,134, EF-16, EF-17
CLOTHING	116		9	20	5	C	6	20		4	TYPING 129
EDF	113		1	15	7	A	8	20		5	TYPING 129
CORRIDOR	113		5	20	9	B	10	20		4	TYPING 128
VENDING	123A		2	20	11	C	12	20			RACEWAY
VENDING	123A		1	20	13	A	14	20		10	BUSINESS 130
VENDING	123A		1	20	15	B	16	20		11	BUSINESS 130
ELEVATOR CONT.	125		1	20	17	C	18	20		10	BUSINESS 130
UV-1 & 2, 112 & 116				20	19	A	20	20		12	OFF. PRACTICE 134
UV-3	117			15	21	B	22	20		14	OFF. PRACTICE 134
UV-4 & 5 129 & 130				20	23	C	24	20		12	OFF. PRACTICE 134
UV-5 FC-5	134			15	25	A	26	20	X		EQUIP. RM. 124
UV-10	138			15	27	B	28	20			SPARE
SPARE				20	29	C	30	20			SPARE
WASHER	143			20	31	A	32				SPACE
DRYER	143			30	33	B	34				SPACE
					35	C	36				SPACE
					37	A	38				
					39	B	40				
					41	C	42				

2 PANELBOARD "F" LOCATION 224 EMD = 27.9 KVA
FLUSH MOUNTED, 30, 4W, 120/208V, 225A MAINS S/N

LOAD		LTG	REC	BKR	CKT	Ø	CKT	BKR	LTG	REC	LOAD
SCIENCE, EF-7	201	5		20	1	A	2	20		8	CLASSROOM 208
SCIENCE	201, 202	6		20	3	B	4	20		7	CLASSROOM 203
SCIENCE, EF-8	202	8		20	5	C	6	20			EDF, EF-6 209
CLASSROOM	212	8		20	7	A	8	20		2	VENDING 213
REMEDIAL READ. SFH1	217	8		20	9	B	10	20		1	VENDING 213
WORK RM.	221	8		20	11	C	12	20		1	VENDING 213
ARTS, EF-12	223	8		20	13	A	14	20		1	ARTS 223
ARTS	223	5		20	15	B	16	20		1	ARTS 223
ARTS	223	1		20	17	C	18	20		1	ARTS 223
ARTS	223	1		20	19	A	20	20		1	ARTS 223
ARTS	223	1		20	21	B	22	20		1	ARTS 223
CLAY/KILN	226	1		20	23	C	24	20		1	ARTS 225
CLAY/KILN	226	1		20	25	A	26	20		1	ARTS 225
CLAY/KILN	226	1		20	27	B	28	20		1	ARTS 225
CLAY/KILN	226	1		20	29	C	30	20			UV-12,13 201,202
EF-10, 13		1		20	31	A	32	20			UV-14,15 201,202
SPARE					33	B	34	20			UV-16,17 205,210
SPARE					35	C	36	20			UV-18,19 211,212
SPACE					37	A	38	15			UV-7 & 8 213,214,223
KILN	226	1		50	39	B	40	50	1		UV-9 & FC-6 225
					41	C	42				KILN 226

2 PANELBOARD "M" LOCATION 124 EMD = KVA
FLUSH MOUNTED, 30, 4W, 120/208, 600A MAIN BREAKER S/N

LOAD		LTG	REC	BKR	CKT	Ø	CKT	BKR	LTG	REC	LOAD
PANEL "E"	80		1	B	2	80			PANEL "L"		
				C							
				A	4	20			HCP-1, HCP-2	231	
PANEL "G"	150		3	B	6	15			AIR DRYER	231	
				C	8	20	2			231	
SPACE				A	10	20	2		TIME CLOCK (TEMP. CONT.)	231	
				B	12	15			SPACE		
				C	14				SPACE		
				A	16				SPACE		
				B	18				SPACE		
				C	20				SPACE		
				A	22						
				B	24						
				C	26						
				A	28						

2 PANELBOARD "N" LOCATION 231 EMD = KVA
SURFACE MOUNTED, 30, 4W, 120/208V, 400A MAIN BREAKER S/N

LOAD		LTG	REC	BKR	CKT	Ø	CKT	BKR	LTG	REC	LOAD
ROOF			15	5	A	10	20			2	TIME CLOCK (TEMP. CONT.) 231
			20	7	B	12	15				
			20	9	C	14					SPACE
				11	A	16					SPACE
				13	B	18					SPACE
				15	C	20					SPACE
				25		26					
				27		28					
				29		30					
				31		32					
				33		34					
				35		36					
				37		38					
				39		40					
				41		42					

2 PANELBOARD "K" LOCATION 168 END = 46.8 KVA
FLUSH MOUNTED, 30, 4W, 277/480V, 225A MAINS S/N

LOAD		LTG	REC	BKR	CKT	Ø	CKT	BKR	LTG	REC	LOAD
				15	1	B	2	20			CONVECTION OVEN (12)
					3		4				
					5		6				
				40	7	B	8	20			CONVECTION OVEN (12)
					9		10				
					11		12				
				30	13	B	14	20			DISPOSER (28) a
					15		16				
				15	17	B	18	20			CUTTER/MIXER (28) b
					19		20				
					21		22				
				30	23	B	24	15			DISHWASHER (36) a
					25		26				
					27		28				
				60	29	B	30	20			SPARE
					31		32				
					33		34				
					35		36				
					37		38				
					39		40				
					41		42				

2 PANELBOARD "P" LOCATION 168 END = 38.8 KVA
FLUSH MOUNTED, 30, 4W, 120/208V, 225A MAINS S/N

LOAD		LTG	REC	BKR	CKT	Ø	CKT	BKR	LTG	REC	LOAD
				60	1	A	2	15			CONDENSING UNIT (FREEZER)
					3		4				
					5		6				
				60	7	A	8	15			DEFROST HTR. (FREEZER)
					9		10				
					11		12				
				70	13	A	14	15			CONDENSING UNIT (REFRIGERATOR)
					15		16				
					17		18				
				15	19	B	20	15			SERVING COUNTER
					21		22				
					23		24				
				70	25	A	26	15			SPARE
					27		28				
					29		30				
				60	31	B	32	20			SPACE
					33		34				
					35		36				
					37		38				
					39		40				
					41		42				

GROUND FAULT INTERRUPTING TYPE BREAKER

2 PANELBOARD "F" LOCATION 224 EMD = 27.9 KVA
FLUSH MOUNTED, 30, 4W, 120/208V, 225A MAINS S/N

LOAD		LTG	REC	BKR	CKT	Ø	CKT	BKR	LTG	REC	LOAD
SCIENCE, EF-7	201	5		20	1	A	2	20		8	CLASSROOM 208
SCIENCE	201, 202	6		20	3	B	4	20		7	CLASSROOM 203
SCIENCE, EF-8	202	8		20	5	C	6	20			EDF, EF-6 209
CLASSROOM	212	8		20	7	A	8	20		2	VENDING 213
REMEDIAL READ. SFH1	217	8		20	9	B	10	20		1	VENDING 213
WORK RM.	221	8		20	11	C	12	20		1	VENDING 213
ARTS, EF-12	223	8		20	13	A	14	20		1	ARTS 223
ARTS	223	5		20	15	B	16	20		1	ARTS 223
ARTS	223	1		20	17	C	18	20		1	ARTS 223
ARTS	223	1		20	19	A	20	20		1	ARTS 223
ARTS	223	1		20	21	B	22	20		1	ARTS 223
CLAY/KILN	226	1		20	23	C	24	20		1	ARTS 225
CLAY/KILN	226	1		20	25	A	26	20		1	ARTS 225
CLAY/KILN	226	1		20	27	B	28	20		1	ARTS 225
CLAY/KILN	226	1		20	29	C	30	20			UV-12,13 201,202
EF-10, 13		1		20	31	A	32	20			UV-14,15 201,202
SPARE					33	B	34	20			UV-16,17 205,210
SPARE					35	C	36	20			UV-18,19 211,212
SPACE					37	A	38	15			UV-7 & 8 213,214,223
KILN	226	1		50	39	B	40	50	1		UV-9 & FC-6 225
					41	C	42				KILN 226

ADDITION TO HIGH SCHOOL
UNIFIED SCHOOL DISTRICT #320
WAMEGO, KANSAS
PANELBOARD SCHEDULES

RODNEY L. ANDERSEN — 685 — KANSAS — PROFESSIONAL ENGINEER

WILSON & COMPANY
SALINA KANSAS

2 ADDENDUM NO. 2	28/9/79	MRE
REVISION	DATE	BY

DESIGN RLA
DRAWN WDB
DATE SEPT 1979
FILE NO. 78-506
SHEET NO. E-13

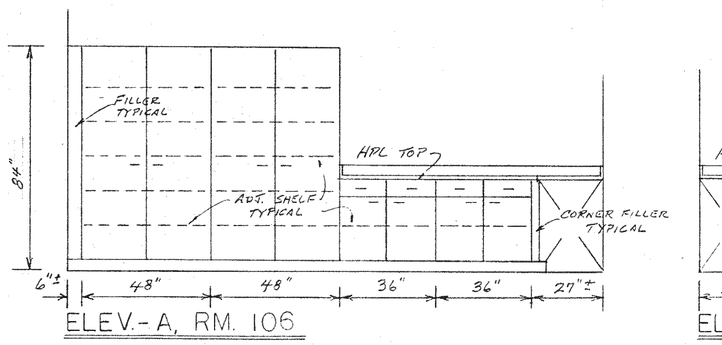

ELEV.- A, RM. 106

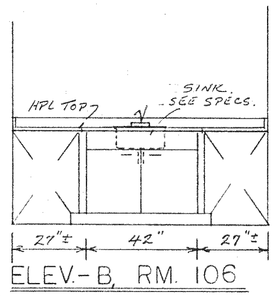

ELEV.- B, RM. 106

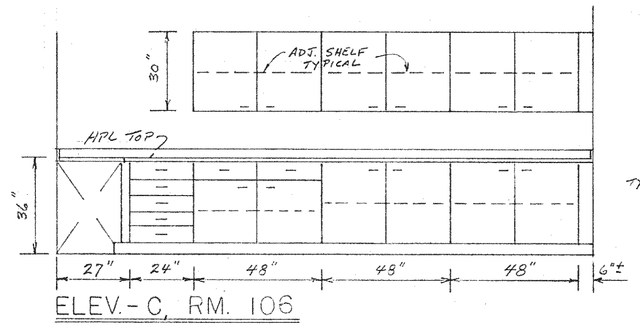

ELEV.- C, RM. 106

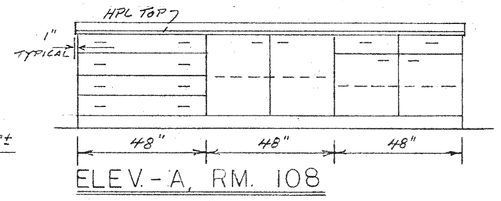

ELEV.- A, RM. 108

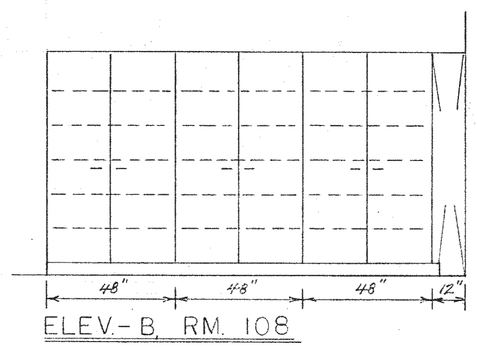

ELEV.- B, RM. 108

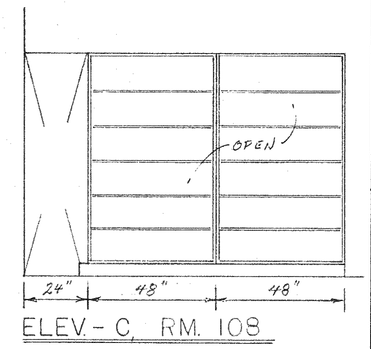

ELEV.- C, RM. 108

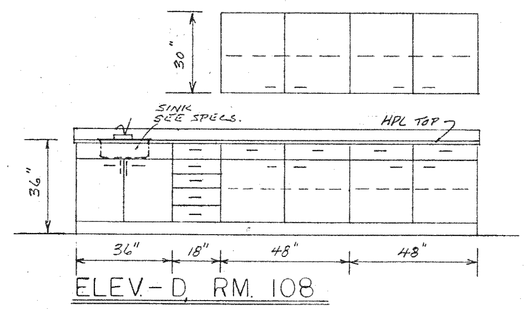

ELEV.- D, RM. 108

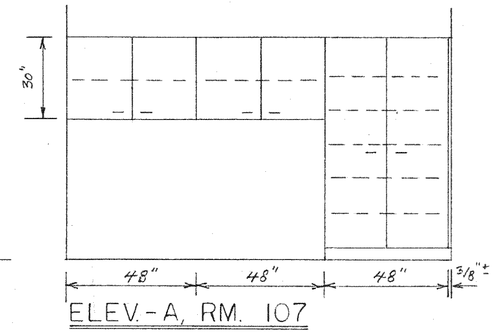

ELEV.- A, RM. 107

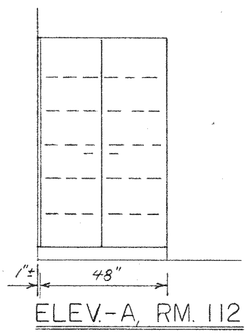

ELEV.- A, RM. 112

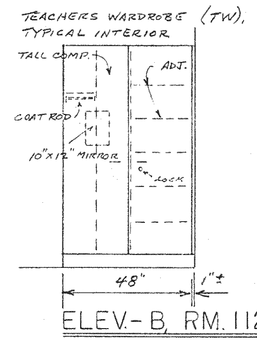

ELEV.- B, RM. 112

ELEV.-A ROOMS
129 130 134
203 207 208
210 211 212
AS SHOWN OR REVERSED

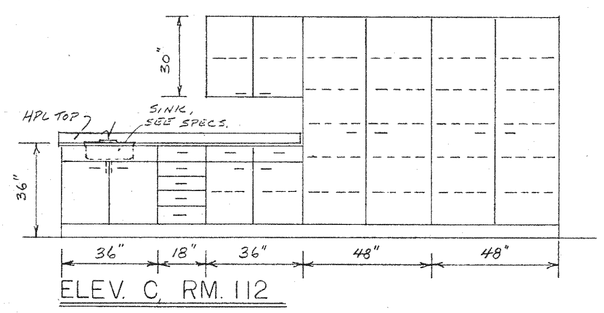

ELEV. C, RM. 112

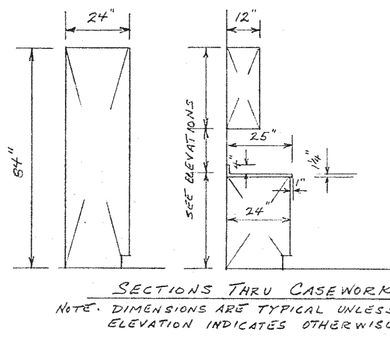

SECTIONS THRU CASEWORK
NOTE: DIMENSIONS ARE TYPICAL UNLESS ELEVATION INDICATES OTHERWISE.

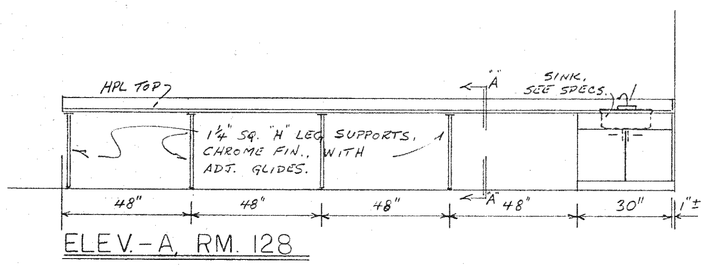

ELEV.- A, RM. 128

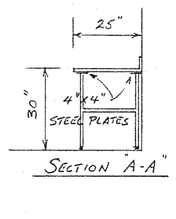

SECTION 'A-A'

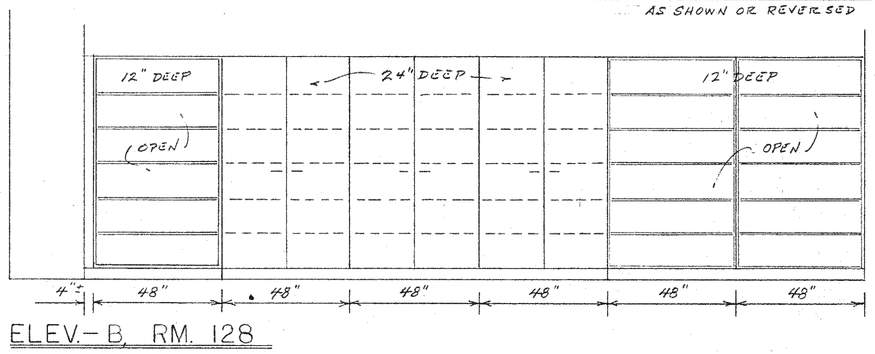

ELEV.- B, RM. 128

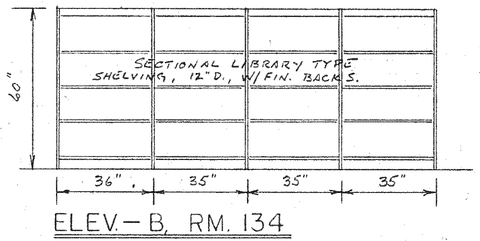

ELEV.- B, RM. 134

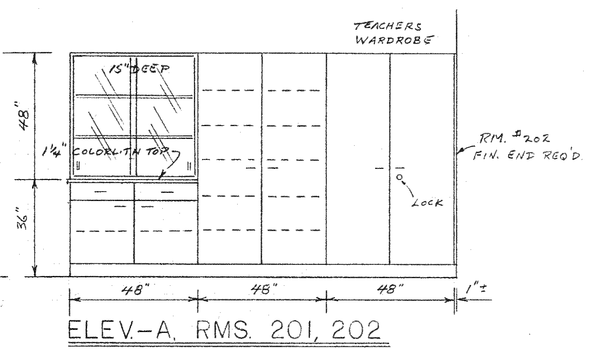

ELEV.- A, RMS. 201, 202
AS SHOWN OR REVERSED

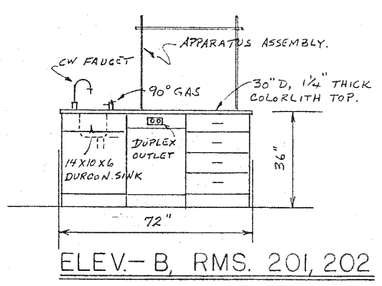

ELEV.- B, RMS. 201, 202

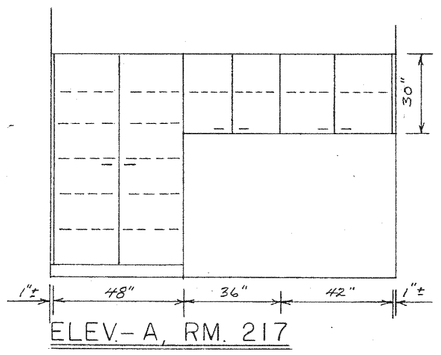

ELEV.- A, RM. 217

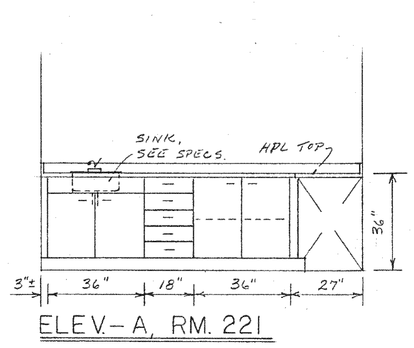

ELEV.- A, RM. 221

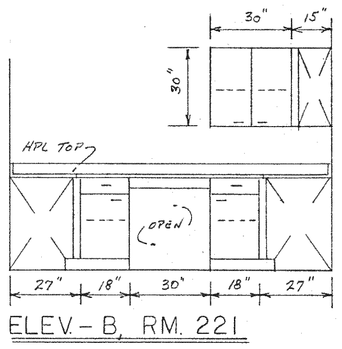

ELEV.- B, RM. 221

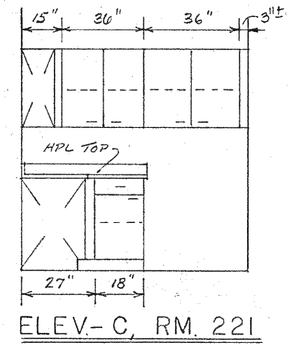

ELEV.- C, RM. 221

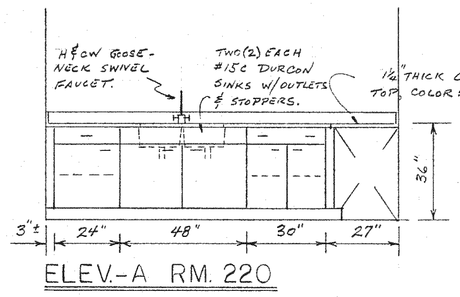

ELEV.-A RM. 220

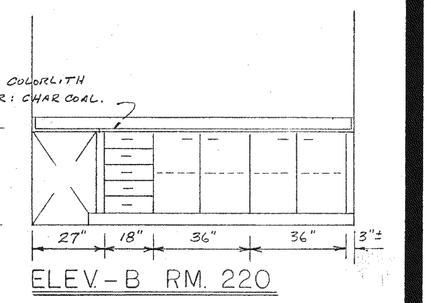

ELEV.-B RM. 220

GROUP - "A", GENERAL CASEWORK

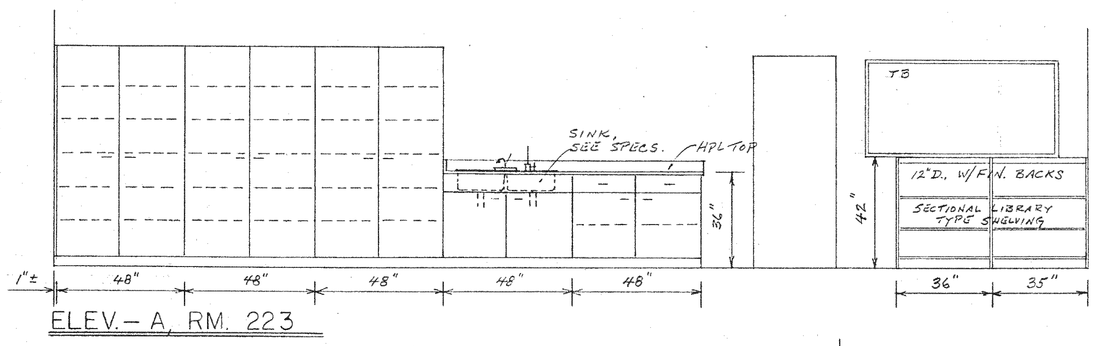

ELEV.- A, RM. 223

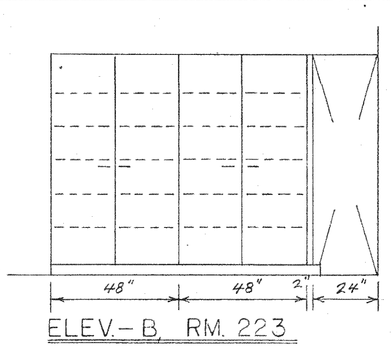

ELEV.- B, RM. 223

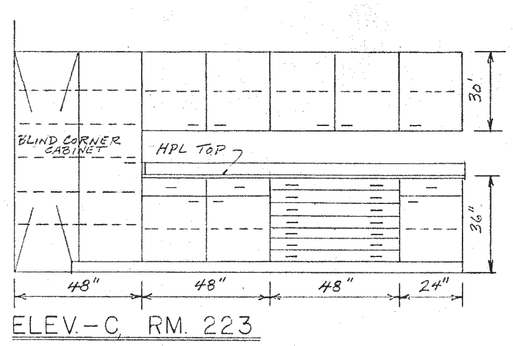

ELEV.- C, RM. 223

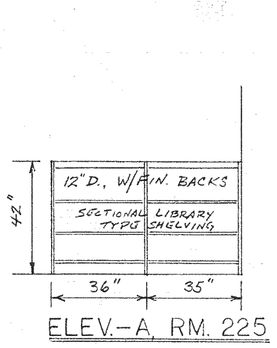

ELEV.- A, RM. 225

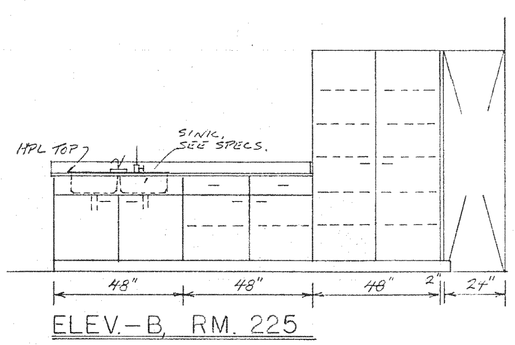

ELEV.- B, RM. 225

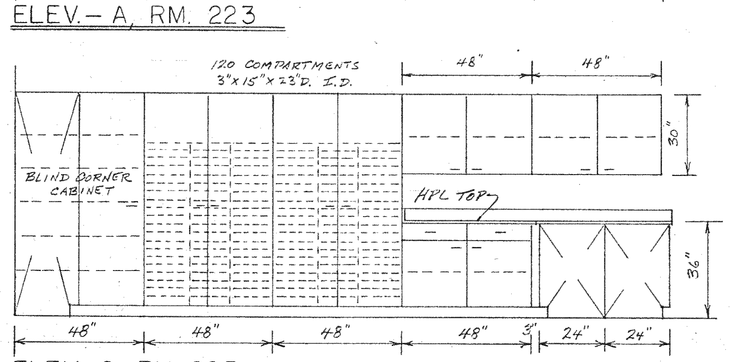

ELEV.- C RM. 225

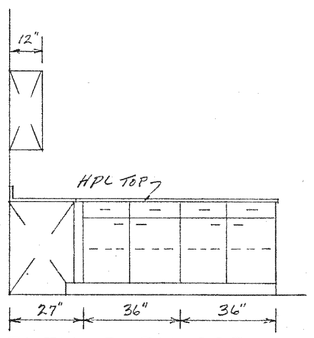

ELEV.- D RM. 225

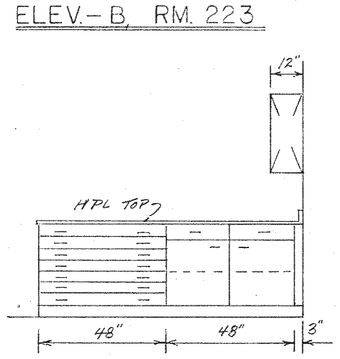

ELEV.- E RM. 225

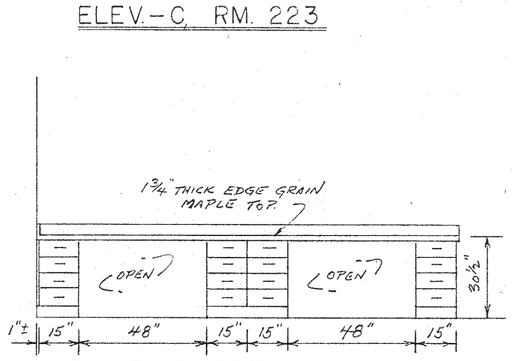

ELEV.- F RM. 225

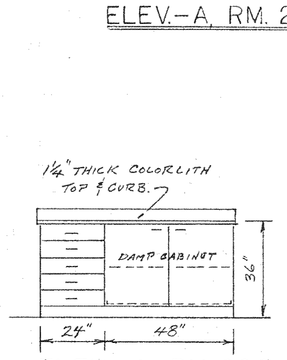

ELEV.- A, RM. 226

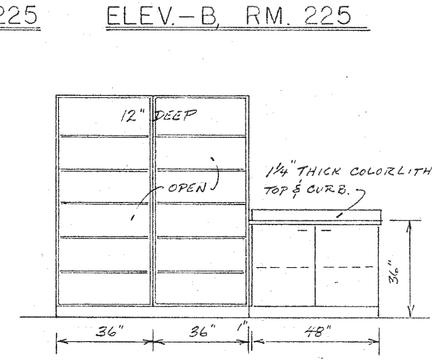

ELEV.- B, RM. 226

GROUP - "B", ARTS - CRAFTS CASEWORK

FOR GENERAL INFORMATION ONLY - NOT IN CONTRACT

SCALE: 3/8"=1'-0"

WILSON & COMPANY
SALINA
KANSAS

REVISION

ADDITION TO HIGH SCHOOL
UNIFIED SCHOOL DISTRICT #320
WAMEGO, KANSAS
FURNITURE AND EQUIPMENT

DESIGN	WEC
DRAWN	WEC.
DATE	SEPT. 1979
FILE NO.	70-50B
SHEET NO.	F & E-3

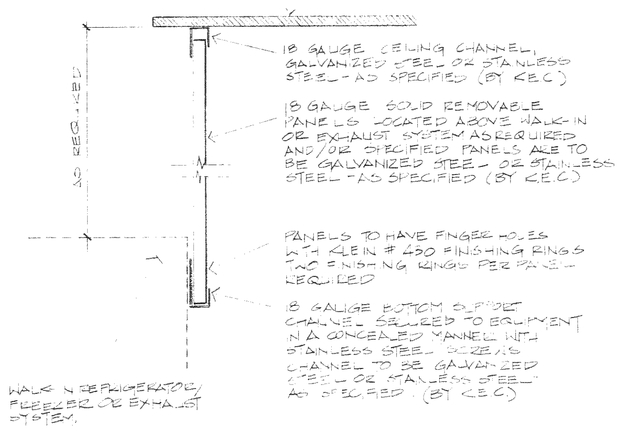

8 KE-1 CLOSURE PANELS
NO SCALE

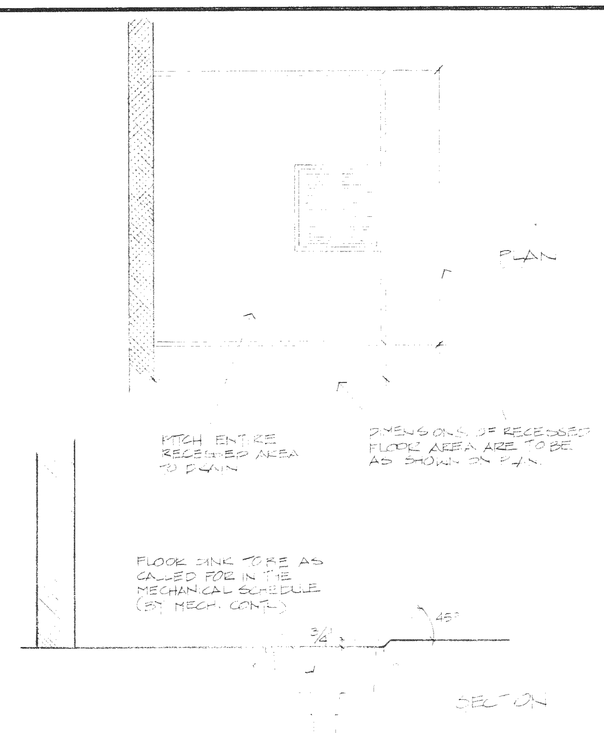

15 KE-1 FLOOR RECESS
NO SCALE

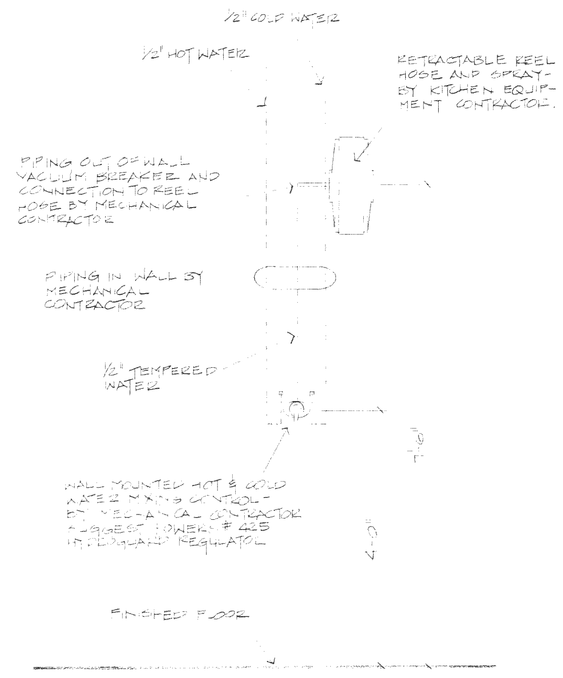

18 KE-1 RETRACTABLE REEL HOSE
3/4" = 1'-0"

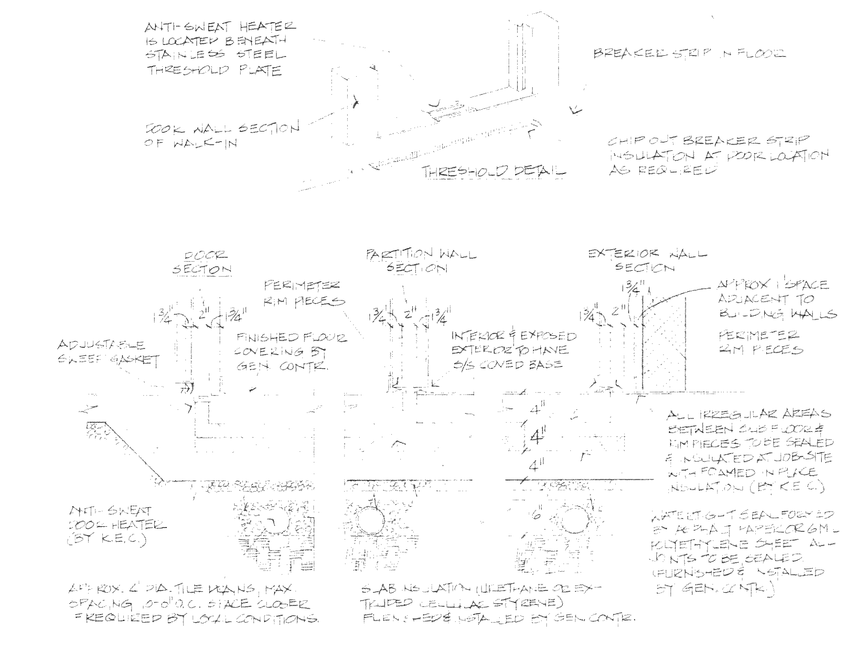

14 KE-1 WALK-IN FLOOR DETAILS
NO SCALE

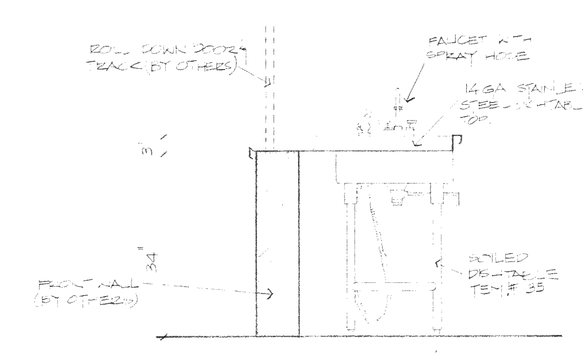

47 KE-1 TRAY DEPOT SECTION
3/4" = 1'-0"

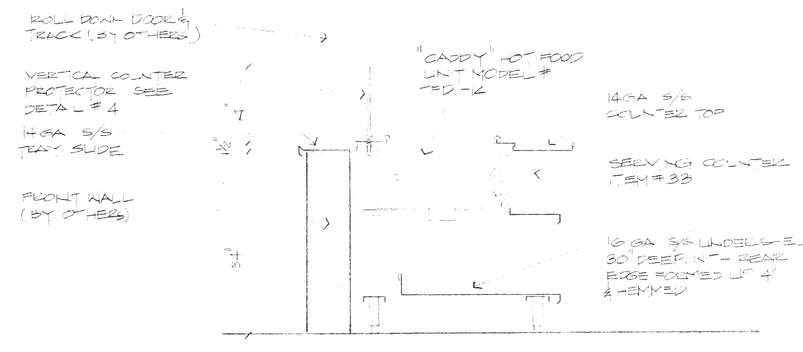

48 KE-1 SERVING COUNTER SECTION
3/4" = 1'-0"

REVISION	DATE	BY

WILSON & COMPANY
SALINA KANSAS

ADDITION TO HIGH SCHOOL
UNIFIED SCHOOL DISTRICT #320
WAMEGO KANSAS
FOOD SERVICE MISCELLANEOUS DETAILS

DESIGN	FMS
DRAWN	JY & PL
DATE	SEPT. 1979
FILE NO.	78-508
SHEET NO	KE-1

W. Milt Pantee and Associates
food service consultants
4307 Madison 816/753-3590
Kansas City, Missouri 64111

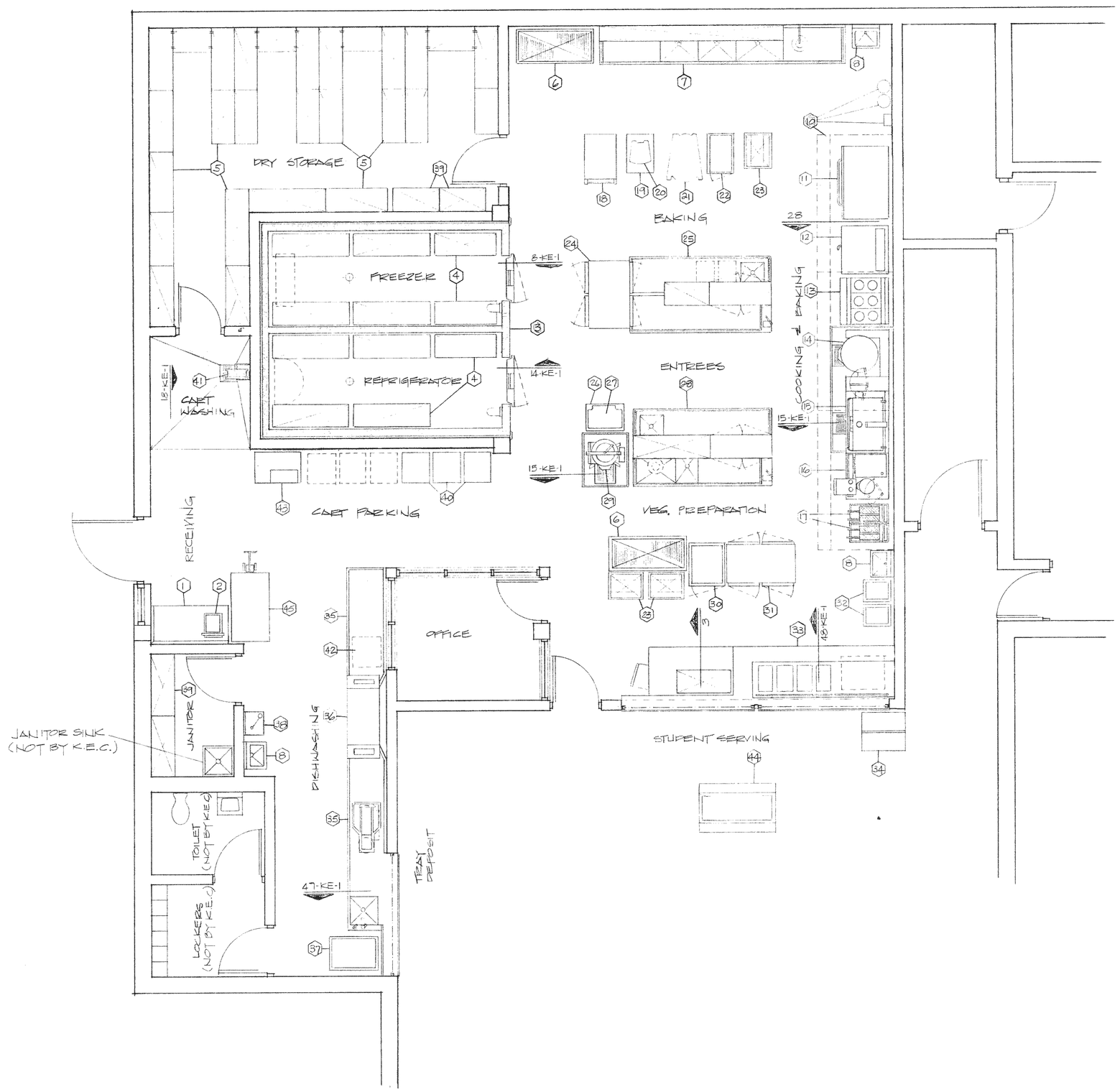

EQUIPMENT SCHEDULE

1. RECEIVING TABLE
2. RECEIVING SCALE
3. WALK-IN REFRIGERATOR/FREEZER
4. WALK-IN SHELVING
5. DRY STORAGE SHELVING
6. UTENSIL RACKS (2-ONLY)
7. UTENSIL WASHING SINK
8. HAND SINKS (3-ONLY)
9. NUMBER NOT USED
10. EXHAUST SYSTEM
11. STACK OVEN (EXISTING)
12. CONVECTION OVEN
13. RANGE (EXISTING)
14. KETTLE
15. FRY PAN
16. KETTLE & STEAMER
17. FRYERS (2-ONLY)
18. UTILITY CART (EXISTING)
19. MIXER STAND
20. MIXER (EXISTING)
21. MIXER (EXISTING)
22. PROOF CABINET (EXISTING)
23. COOLING RACKS (3-ONLY-EXISTING)
24. REFRIGERATOR
25. WORKTABLE
26. SLICER STAND
27. SLICER
28. WORKTABLE
29. CUTTER/MIXER
30. PORTABLE HOT CABINET
31. REFRIGERATOR
32. TRAY DISPENSERS (2-ONLY-EXISTING)
33. SERVING COUNTER
34. PORTABLE MILK CABINET
35. CLEAN & SOILED DISHTABLE
36. DISHWASHER
37. TRASH BIN
38. DRINKING FOUNTAIN (BY OTHERS)
39. SHELVING UNITS (4-ONLY-EXISTING)
40. TRANSPORT CARTS (3-ONLY)
41. REEL HOSE
42. BOOSTER HEATER
43. ICE MACHINE
44. PORTABLE SALAD BAR
45. RECEIVING PLATFORM

WAMEGO HIGH SCHOOL
WAMEGO, KANSAS

FOOD SERVICE PLAN
1/4" = 1'-0"

W.M.T.S. w. milt santee and associates
food service consultants
4307 madison 816/753-3590
kansas city, missouri 64111

REVISION	DATE	BY

WILSON & COMPANY
SALINA KANSAS

ADDITION TO HIGH SCHOOL
UNIFIED SCHOOL DISTRICT #320
WAMEGO, KANSAS
FOOD SERVICE PLAN

DESIGN	FMS
DRAWN	JY
DATE	SEPT. 1979
FILE NO.	78-508
SHEET NO.	KE-2

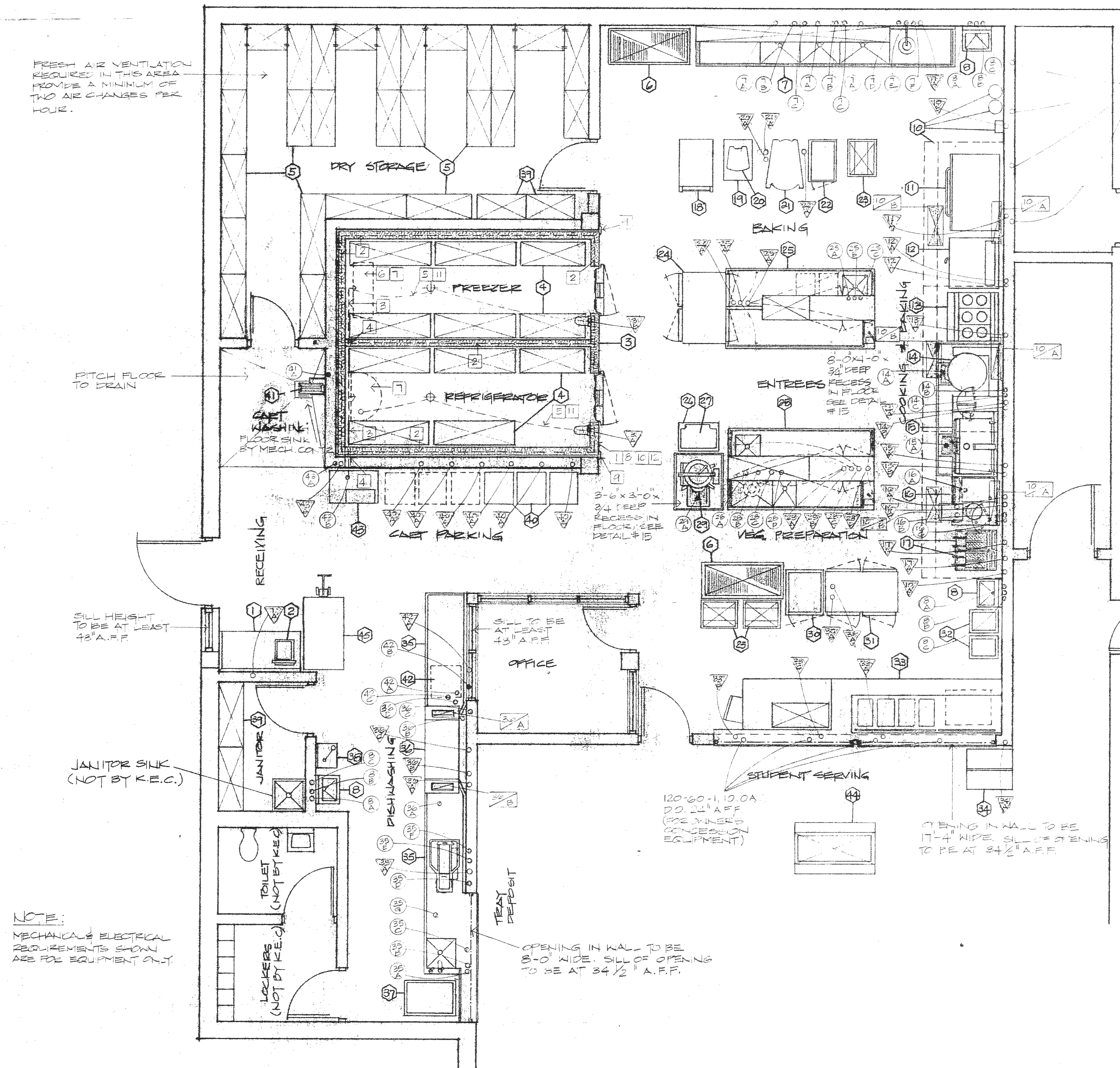

EQUIPMENT SCHEDULE

1. RECEIVING TABLE
2. RECEIVING SCALE
3. WALK-IN REFRIGERATOR/FREEZER
4. WALK-IN SHELVING
5. DRY STORAGE SHELVING
6. UTENSIL RACKS (2-ONLY)
7. UTENSIL WASHING SINK
8. HAND SINKS (3-ONLY)
9. NUMBER NOT USED
10. EXHAUST SYSTEM
11. STACK OVEN (EXISTING)
12. CONVECTION OVEN
13. RANGE (EXISTING)
14. KETTLE
15. FRY PAN
16. KETTLE & STEAMER
17. FRYERS (2-ONLY)
18. UTILITY CART (EXISTING)
19. MIXER STAND
20. MIXER (EXISTING)
21. MIXER (EXISTING)
22. PROOF CABINET (EXISTING)
23. COOLING RACKS (3-ONLY-EXISTING)
24. REFRIGERATOR
25. WORKTABLE
26. SLICER STAND
27. SLICER
28. WORKTABLE
29. CUTTER/MIXER
30. PORTABLE HOT CABINET
31. REFRIGERATOR
32. TRAY DISPENSERS (2-ONLY-EXISTING)
33. SERVING COUNTER
34. PORTABLE MILK CABINET
35. CLEAN & SOILED DISHTABLE
36. DISHWASHER
37. TRASH BIN
38. DRINKING FOUNTAIN (BY OTHERS)
39. SHELVING UNITS (4-ONLY-EXISTING)
40. TRANSPORT CARTS (3-ONLY)
41. REEL HOSE
42. BOOSTER HEATER
43. ICE MACHINE
44. PORTABLE SALAD BAR
45. RECEIVING PLATFORM

ELECTRICAL SCHEDULE

- 1A 120-60-1, 10.0A., D.O. 45" A.F.F.
- 3A 120-60-1, 10.0A., E.C. APPROX. 7'-7" A.F.F. (ELEC. CONTR. TO CONNECT TO J.B. ON TOP EXTERIOR OF WALK-IN FOR P.W. DOOR LIGHT AND DOOR HEATER, FIELD WIRED CENTER LIGHT AND EVAPORATOR.)
- 3B 120-60-1, 10.0A., E.C. APPROX. 7'-7" A.F.F. (ELEC. CONTR. TO CONNECT TO J.B. ON TOP EXTERIOR OF WALK-IN FOR P.W. DOOR LIGHT AND DOOR HEATER. FIELD WIRED CENTER LIGHT AND DRAIN LINE HEATER CABLE.)
- 7A 480-60-3, 1 H.P., J.B. 18" A.F.F. (DISPOSER)
- 10A 120-60-1, 0.5 K.W., SWITCH AT 48" A.F.F. (ELEC. CONTR. TO FURNISH AND INSTALL SWITCH AND RUN CONDUIT & WIRE IN A CONCEALED MANNER TO EXHAUST HOOD FLUORESCENT LIGHTS.)
- 10B 120-60-1, 20.0A., J.B. 7'-6" A.F.F. (ELEC. CONTR. TO CONNECT TO MICRO-SWITCH ON DRY CHEMICAL FIRE PROTECTION SYSTEM AND SHALL CONNECT TO FIRE-FUEL SHUT-OFF DEVICES FURNISHED AND INSTALLED BY ELEC. & MECH. CONTRACTORS.)
- 11A 208-60-3, 18.6 K.W., J.B. 9" A.F.F.
- 12A 480-60-3, 11.0 K.W., J.B. 30" A.F.F.
- 13A 208-60-3, 18.7 K.W., J.B. 9" A.F.F.
- 14A 480-60-3, 24.0 K.W., J.B. 12" A.F.F.
- 14B 120-60-1, 5.0A., J.B. 12" A.F.F. (TILT MECHANISM)
- 15A 480-60-3, 15.0 K.W., J.B. 18" A.F.F.
- 15B 120-60-1, 5.0A., J.B. 18" A.F.F. (TILT MECHANISM)
- 16A 480-60-3, 36.0 K.W., J.B. 18" A.F.F. (STEAM GENERATOR)
- 16B 120-60-1, 5.0A + 5.0A., J.B. 18" A.F.F. (STEAMER CONTROLS)
- 17A 208-60-3, 17.3 K.W., J.B. 24" A.F.F.
- 20A 120-60-1, 10.0A., D.O. 4" A.F.F.
- 21A 208-60-3, 1 H.P., S.L.
- 22A 120-60-1, 1.0 K.W., O.B. 4" A.F.F.
- 24A 120-60-1, 1/3 H.P., D.O. 4" A.F.F.
- 25A 120-60-1, 10.0A + 10.0A., S.U. (ELEC. CONTR. TO CONNECT TO TWO P.W., D.O.'S IN BASE.)
- 28A 480-60-3, 2 H.P., S.U. (ELEC. CONTR. TO CONNECT TO A P.W. J.B. IN BASE FOR DISPOSER)
- 28B 480-60-3, 3 H.P., S.U. (ELEC. CONTR. TO CONNECT TO P.W., O.B. IN TABLE FOR ITEM # 29)
- 28C 120-60-1, 10.0A., S.L. (ELEC. CONTR. TO CONNECT TO P.W., D.O. IN BASE)
- 28D 120-60-1, 10.0A + 10.0A., S.L. (ELEC. CONTR. TO CONNECT TWO P.W., D.O.'S IN BASE)
- 30A 120-60-1, 2.1 K.W., O.B. 4" A.F.F.
- 31A 120-60-1, 10.0A., D.O. 4" A.F.F.
- 33A 208-60-3, 4.0 K.W., J.B. 18" A.F.F. (HOT FOOD UNIT)
- 33B 120-60-1, 10.0A., D.O. 24" A.F.F.
- 33C 120-60-1, 5.0A., J.B. 18" A.F.F. (ELEC. CONTR. TO CONNECT TO P.W. DISPLAY LIGHTS)
- 34A 120-60-1, 10.0A., D.O. 24" A.F.F.
- 35A 480-60-3, 2 H.P. + 1/4 H.P., J.B. 18" A.F.F. (DISPOSER)
- 36A 480-60-3, 15.0 K.W., J.B. 18" A.F.F. (TANK HEAT)
- 36B 480-60-3, 1 1/2 H.P., J.B. 12" A.F.F. (MOTORS & CONTROLS)
- 36C 120-60-1, 10.0A., D.O. 60" A.F.F. (DETERGENT DISP. - BY OWNER)
- 40A 120-60-1, 1.0 K.W., O.B. 24" A.F.F.
- 42A 480-60-3, 54.0 K.W., J.B. 12" A.F.F.
- 43A 120-60-1, 1/4 H.P., J.B. 30" A.F.F.

MECHANICAL SCHEDULE

- 7A 2" WASTE, S.O. 2" A.F.F. (SINK)
- 7B 1/2" H.W., S.O. 18" A.F.F. (FAUCET)
- 7C 1/2" C.W., S.O. 18" A.F.F. (FAUCET)
- 7D 2" WASTE, S.O. 9" A.F.F. (DISPOSER)
- 7E 1/2" H.W., S.O. 18" A.F.F. (PRE-RINSE FAUCET)
- 7F 3/4" C.W., S.O. 18" A.F.F. (COMMON TO DISPOSER & PRE-RINSE FAUCET)
- 8A 1/2" H.W., S.O. 20" A.F.F. (FAUCET)
- 8B 2" WASTE, S.O. 18" A.F.F. (SINK)
- 8C 1/2" C.W., S.O. 20" A.F.F. (FAUCET)
- 14A 3" WASTE, S.L. TO 16"x16" FLOOR SINK - BY MECH. CONTR. (USE A JOSAM #49103-35 WITH LIFT-OFF GRATE & MESH BUCKET LINER.)
- 14B 1/2" H.W., S.O. 24" A.F.F. (FAUCET)
- 14C 1/2" C.W., S.O. 24" A.F.F. (FAUCET)
- 15A 3" WASTE, S.U. TO A 16"x16" FLOOR SINK - BY MECH. CONTR. (USE A JOSAM # 49103-35 WITH LIFT-OFF GRATE & MESH BUCKET LINER)
- 16A F.D. WITH FUNNEL STRAINER
- 16B 1/2" H.W., S.O. 18" A.F.F. (FAUCET)
- 16C 3/4" C.W., S.O. 18" A.F.F. (FAUCET, CONDENSER & STEAM GENERATOR)
- 25A 1/2" C.W., S.U. (FAUCET)
- 25B 2" WASTE, S.U. (SINK)
- 25C 1/2" H.W., S.U. (FAUCET)
- 28A 2" WASTE, S.U. (DISPOSER)
- 28B 2" WASTE, S.U. (COMMON TO TWO SINKS)
- 28C 1/2" H.W., S.U. (COMMON TO TWO FAUCETS)
- 28D 3/4" C.W., S.U. (COMMON TO TWO FAUCETS, DISPOSER)
- 29A 3" WASTE, S.U. TO 16"x16" FLOOR SINK - BY MECH. CONTR. (USE A JOSAM # 49103-35 WITH LIFT-OFF GRATE & MESH BUCKET LINER)
- 35A 1/2" C.W., S.O. 18" A.F.F. (FAUCET)
- 35B 1/2" H.W., S.O. 18" A.F.F. (FAUCET)
- 35C 2" WASTE, S.O. 2" A.F.F. (SINK)
- 35D 2" WASTE, S.O. 9" A.F.F. (DISPOSER)
- 35E 3/4" C.W., S.O. 12" A.F.F. (DISPOSER)
- 35F 3/4" H.W., S.O. 12" A.F.F. (DISPOSER)
- 35G F.D.
- 36A 2" WASTE, S.U.
- 36B 3/4" RINSE DRAIN, E.C. APPROX. 20" A.F.F. (CONNECT TO MAIN DRAIN)
- 36C 1/2" H.W. (140° MIN.), S.O. 12" A.F.F. (TANK FILL)
- 36D 3/4 H.W. (180° MIN.), E.C. APPROX. 23" A.F.F. (CONNECT FROM 42A WITH INSULATED LINE)
- 41A 1/2" TEMPERED WATER, S.O. 7'-6" A.F.F. (SEE DETAIL # 18-KE-1)
- 42A 3/4" H.W. (180° MIN.) OUTLET, E.C. APPROX. 6" A.F.F. (MECH. CONTR. TO CONNECT TO 36D WITH INSULATED LINE)
- 42B 3/4" H.W. (140° MIN.), S.O. 12" A.F.F. (450 G.P.H. REQUIRED AT 20 lbs FLOW PRESSURE)
- 42C F.D. WITH FUNNEL STRAINER
- 43A 1/2" C.W., S.O. 24" A.F.F.
- 43B F.D. WITH FUNNEL STRAINER

VENTILATION SCHEDULE

- 10A (3) 8"x32" EXHAUST OUTLETS, E.C. APPROX. 8'-6" A.F.F., EXHAUSTING 2700 C.F.M. EACH AT 0.70" S.P. AT DUCT OUTLET
- 10B (3) 12"x26" MAKE-UP AIR INLETS E.C. APPROX. 8'-6" A.F.F., SUPPLYING 2160 C.F.M. EACH OF UNTEMPERED AIR WHICH IS 80% OF EXHAUST REQUIREMENTS.
- 36A (1) 4"x16" VENT CONNECTION WITH LOCKING DAMPER, E.C. APPROX. 65" A.F.F., EXHAUSTING 400 C.F.M. DUCT BY OTHERS, TO BE WATER-TIGHT AND SHALL PITCH FOR DRAINAGE (ABOVE CEILING) TO SOILED (OPPOSITE) END OF MACHINE
- 36B (1) 4"x16" VENT CONNECTION WITH LOCKING DAMPER, E.C. APPROX. 65" A.F.F., EXHAUSTING 200 C.F.M. DUCT BY OTHERS, TO BE WATER-TIGHT AND SHALL PITCH FOR DRAINAGE (ABOVE CEILING) TO SOILED (THIS) END OF MACHINE.

WALK-IN NOTES

1. SEE DETAIL 14/KE FOR INSULATED FLOOR DETAIL AND BREAKER STRIPS
2. CENTER LINE OF BREAKER STRIP IN FLOOR.
3. RUN DRAIN LINE EXPOSED IN FREEZER AND REFRIGERATOR BEHIND SHELVING AND EXTENDED DOWN INTO FUNNEL STRAINER OF FLOOR DRAIN 43B (BY K.E.C.)
4. PROVIDE SLEEVES FOR DRAIN LINE IN WALLS OF WALK-IN AND IN BUILDING WALL AT SUFFICIENT HEIGHT FOR PROPER DRAINAGE. CAULK ALL SLEEVES.
5. ALL ELECTRICAL CONNECTIONS FOR WALK-INS INCLUDING WIRING TO ALL EVAPORATORS, VAPOR-PROOF LIGHTS, DOOR HEATERS, THRESHOLD HEATERS, TIME CLOCKS WIRING FROM FREEZER EVAPORATOR TO ROOM THERMOSTAT, AND ALL CONTROLS TO BE BY ELECTRICAL CONTRACTOR.
6. FREEZER EVAPORATOR TO BE ELECTRICALLY INTERLOCKED WITH CONTROL PANEL ON ITS RESPECTIVE COMPRESSOR. THE ELECTRICAL WIRING FROM THE FREEZER CONTROL UNIT ON CONDENSER TO ELECTRIC DEFROST COIL TO BE BY ELECTRICAL CONTRACTOR.
7. REMOTE AIR COOLED REFRIGERATOR AND FREEZER CONDENSING UNITS (ITEM #3) TO BE MOUNTED ON METAL RACKS AND FACTORY WIRED. SPACE REQUIRED APPROXIMATELY 42"x42"x42" HIGH EACH. UNITS TO BE LOCATED OUT OF DOORS ON BUILDING ROOF. EXACT LOCATION BY ARCHITECT. FREEZER TO BE A K-T # CE2LS2SH-LPE92 WIRED 208/60/3Ø WITH AN APPROXIMATE TOTAL LOAD OF 8.0 AMPS, INCLUDING EVAPORATOR. A SEPARATE 208/60/3 PHASE LINE SHALL BE RUN BY THE ELECTRICAL CONTRACTOR FROM THE CONTROL PANEL ON THE CONDENSING UNIT TO THE EVAPORATOR IN THE WALK-IN TO HANDLE A 5.1A. LOAD FOR THE ELECTRIC DEFROST HEATERS. REFRIGERATOR UNIT TO BE A K-T # CIF12X SH-C78 WIRED 208/60/3Ø WITH AN APPROXIMATE TOTAL LOAD OF 5.6 AMPS., NOT INCLUDING EVAPORATOR.
8. OVERALL HEIGHT OF WALK-IN TO BE APPROXIMATELY 7'-6 1/4" A.F.F.
9. K.E.C. TO PROVIDE METAL TRIM STRIPS TO MATCH WALK-IN FACING WHERE WALK-IN ABUTS BUILDING WALLS, AND CLOSURE PANELS FROM TOP OF WALK-IN TO FINISHED CEILING.
10. FINISHED FLOOR TO BE LEVEL PLUS OR MINUS 1/8".

WALK-IN NOTES CONT.

11. ALL ELECTRIC CONDUIT TO BE RUN ON TOP (EXTERIOR) OF WALK-IN AND TO HAVE VAPOR SEALS. ELECTRIC CONDUIT AND VAPOR SEALS FURNISHED AND INSTALLED BY ELECTRICAL CONTRACTOR.
12. ALL OPENINGS AND/OR SLEEVES IN WALLS, FLOOR, OR ROOF FOR THE EXTENSION OF REFRIGERATION LINES, INCLUDING PITCH POCKETS ETC., SHALL BE PROVIDED BY THE GEN. CONTR. IN CONSULTATION WITH THE KITCHEN EQUIPMENT CONTRACTOR.

LEGEND

- (hexagon) EQUIPMENT
- (circle) MECHANICAL
- (triangle) ELECTRICAL
- (box with diagonal) VENTILATION
- (square) WALK-IN NOTES
- A AMPERES
- A.F.F. ABOVE FINISHED FLOOR
- C.W. COLD WATER
- D.O. DUPLEX OUTLET
- E.C. EQUIPMENT CONNECTION
- F.D. FLOOR DRAIN
- H.W. HOT WATER
- J.B. JUNCTION BOX
- O.B. OUTLET BOX
- P.W. PRE-WIRED
- S.O. STUB-OUT
- S.U. STUB-UP

WAMEGO HIGH SCHOOL
WAMEGO, KANSAS

UTILITY REQUIREMENT PLAN
1/4" = 1'-0"

WMS w. milt santee and associates food service consultants
4307 madison 816/753-3580
kansas city, missouri 64111

WILSON & COMPANY
SALINA KANSAS

ADDITION TO HIGH SCHOOL
UNIFIED SCHOOL DISTRICT #320
WAMEGO, KANSAS
FOOD SERVICE UTILITY REQUIREMENT PLAN

DESIGN	FMS
DRAWN	PL
DATE	SEPT. 1979
FILE NO.	78-50B
SHEET NO	KE 3

REVISION	DATE	BY

ROOF PLAN & THIRD FLOOR PLAN

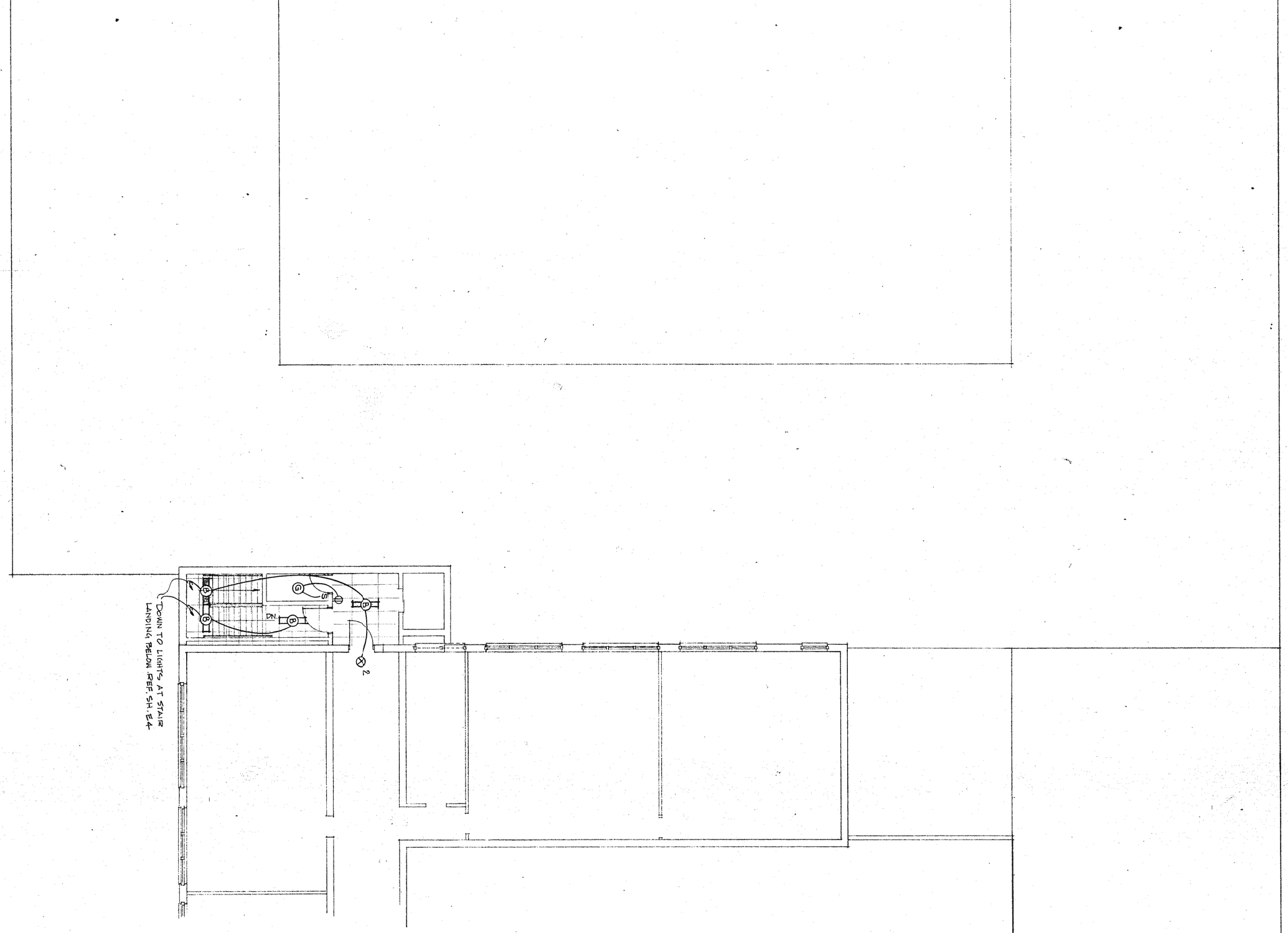

SHEET NO.	E-5
FILE NO.	78-50B
DATE	SEPT. 1979
DRAWN	WDB
DESIGN	RLA

RODNEY L. ANDERSON LICENSED 6786 KANSAS PROFESSIONAL ENGINEER

ADDITION TO HIGH SCHOOL
UNIFIED SCHOOL DISTRICT #320
WAMEGO, KANSAS
ROOF PLAN AND THIRD FLOOR PLAN
LIGHTING AND POWER

WILSON & COMPANY

SALINA KANSAS

REVISION	DATE	BY

PANELBOARD "C" LOCATION 101 EMD = 77.4 KVA
FLUSH MOUNTED, 3ϕ. 4W. 277/480V, 225A MAINS

LOAD		LTG	REC	BKR	CKT	ϕ	CKT	BKR	LTG	REC		
GYM	175	X		20	1	A	2	20	X		COMMONS	101
GYM	175	X		20	3	B	4	20	X		CORRIDOR	113
GYM	175	X		20	5	C	6	20	X		CORRIDOR	137
GYM	175	X		20	7	A	8	20	X		RECEPTION	103
GYM	175	X		20	9	B	10	20	X		LOUNGE	108
GYM	175	X		20	11	C	12	20	X		CLASS RM.	112
SHOP	138	X		20	13	A	14	20	X		CLOTHING	116
SHOP	138	X		20	15	B	16	20	X		HOME ECON.	117
SPARE				20	17	C	18	20	X		OFFICE PRACT.	134
ATHLETIC	150	X		20	19	A	20	20	X		BUSINESS	130
GIRLS P.E.	161	X		20	21	B	22	20	X		BEG. TYPING	129
KITCHEN	165	X		20	23	C	24	20	X		P.E. DECK	229
EQUIP. RM.	231	X		20	25	A	26	20	X		P.E. DECK	229
SPARE				20	27	B	28	20	X		P.E. DECK	229
SPARE					29	C	30	40			EMERG. POWER	101
					31	A	32	20	X		EXTERIOR LTG.	
FUTURE WASHER					33	B	34				SPACE	
					35	C	36				SPACE	
					37		38					
					39		40					
					41		42					

PANELBOARD "D" LOCATION 224 EMD = 34.2 KVA
FLUSH MOUNTED, 3ϕ, 4W, 277/480V, 100 MAINS

LOAD		LTG	REC	BKR	CKT	ϕ	CKT	BKR	LTG	REC		
CLASSROOM	201	X		20	1	A	2	20	X		CLASSROOM	210
CLASSROOM	202	X		20	3	B	4	20	X		CLASSROOM	208
CLASSROOM	203	X		20	5	C	6	20	X		CLASSROOM	207
CLASSROOM	211	X		20	7	A	8	20	X		ARTS/CRAFTS	223
CLASSROOM	212	X		20	9	B	10	20	X		ARTS/CRAFTS	225
MEDIA	219	X		20	11	C	12	20	X		CORRIDORS	
SPARE				20	13	A	14	20	X		CORRIDORS	
SPARE				20	15	B	16	20	X		SPARE	
SPARE				20	17	C	18	20			SPARE	
					19	A	20					
					21	B	22					
					23	C	24					
					25	A	26					
					27	B	28					
					29	C	30					
					31	A	32					
					33	B	34					
					35	C	36					
					37	A	38					
					39	B	40					
					41	C	42					

PANELBOARD "E" LOCATION 124 EMD = 22.8 KVA
FLUSH MOUNTED, 3ϕ 4W, 120/208V. 225A MAINS

LOAD		LTG	REC	BKR	CKT	ϕ	CKT	BKR	LTG	REC		
CLASSROOM	112		7	20	1	A	2	20		9	CORRIDOR	137
CLOTHING	116		6	20	3	B	4	20		8	TYPING	130
CLOTHING	116		9	20	5	C	6	20		4	TYPING	129
EDF	113		1	15	7	A	8	20		5	TYPING	129
CORRIDOR	113		5	20	9	B	10	20		4	TYPING	129
VENDING	123A		2	20	11	C	12	20			RACEWAY	128
VENDING	123A		1	20	13	A	14	20		10	BUSINESS	130
VENDING	123A		1	20	15	B	16	20		11	BUSINESS	130
ELEVATOR			1	20	17	C	18	20		10	BUSINESS	130
UV-1 & 2	112 & 116			20	19	A	20	20		12	OFF. PRACTICE	134
UV-3	117			15	21	B	22	20		14	OFF. PRACTICE	134
UV-4 & 5	129 & 130			20	23	C	24	20		12	OFF. PRACTICE	134
UV-6 FC-5	134			15	25	A	26	20	X		EQUIP. RM.	124
UV-10	138			15	27	B	28	20			SPARE	
SPARE				20	29	C	30	20			SPARE	
WASHER	143			20	31	A	32				SPACE	
DRYER	143			30	33	B	34				SPACE	
						C	36				SPACE	
					37		38					
					39		40					
					41		42					

PANELBOARD "F" LOCATION 224 EMD = 27.9 KVA
FLUSH MOUNTED, 3ϕ, 4W, 120/208V. 225A MAINS

LOAD		LTG	REC	BKR	CKT	ϕ	CKT	BKR	LTG	REC		
SCIENCE	201		5	20	1	A	2	20		8	CLASSROOM	208
SCIENCE	201, 202		6	20	3	B	4	20		7	CLASSROOM	203
SCIENCE	202		5	20	5	C	6	20		2	EDF	209
CLASSROOM	212		8	20	7	A	8	20		2	VENDING	213
CLASSROOM	211		8	20	9	B	10	20		1	VENDING	213
REMEDIAL READ.	217		8	20	11	C	12	20		1	VENDING	213
WORK RM.	221		8	20	13	A	14	20		1	ARTS	223
ARTS	223		5	20	15	B	16	20		1	ARTS	223
ARTS	223		1	20	17	C	18	20		1	ARTS	223
ARTS	223		1	20	19	A	20	20		1	ARTS	223
ARTS	223		1	20	21	B	22	20		1	ARTS	223
CLAY/KILN	226		1	20	23	C	24	20		1	ARTS	225
CLAY/KILN	226		1	20	25	A	26	20		1	ARTS	225
CLAY/KILN	226		1	20	27	B	28	20			UV-12&13	201&202
CLAY/KILN	226		1	20	29	C	30	20			UV-14&15	203&207
EF-10, 13				20	31	A	32	20			UV-16&17	208&210
SPARE				20	33	B	34	20			UV-18&19	211&212
SPARE				20	35	C	36	20			UV-7 & 8	219&223
SPARE				20	37	A	38	15			UV-9 & FC-6	225
KILN	226		1	50	39	B	40	50	1		KILN	226
						C						

PANELBOARD "G" LOCATION 124 EMD = 32.9 KVA
SURFACE MOUNTED, 3ϕ, 4W, 120/208V, 225A MAINS

LOAD		LTG	REC	BKR	CKT	ϕ	CKT	BKR	LTG	REC		
COUNTER TOP	118		1	20	1	A	2	20		1	COUNTER TOP	118
COUNTER TOP	118		1	20	3	B	4	20		1	COUNTER TOP	118
COUNTER TOP	118		1	20	5	C	6	20		1	REFRIGERATOR	118
COUNTER TOP	118		1	20	7	A	8	20		1	RANGE	118
COUNTER TOP	118		2	20	9	B	10	20		1	RANGE	118
COUNTER TOP	118		1	20	11	C	12	20		1	WASHER	117
COUNTER TOP	118		1	20	13	A	14	20			SPARE	
REFRIGERATOR	118		1	20	15	B	16	20			SPARE	
COUNTER TOP	118		2	20	17	C	18	20			SPARE	
COUNTER TOP	118		1	20	19	A	20	20			SPARE	
SPACE					21	B	22	20			SPACE	
SPACE					23	C	24				SPACE	
SPACE					25	A	26				SPACE	
OVEN	118			50	27	B	28				SPACE	
						C	30				SPACE	
RANGE	118			50	29	A	32	30			DRYER	118
						B						
RANGE TOP	118			50	31	C	34	50			RANGE	118
						A						
RANGE	118			50	33	B	36	50			RANGE	118
						C						

PANELBOARD "H" LOCATION RM. 101 EMD = 15.5 KVA
FLUSH MOUNTED, 3ϕ, 4W, 120/208V, 225A MAINS

LOAD		LTG	REC	BKR	CKT	ϕ	CKT	BKR	LTG	REC		
EDF	101		2	20	1	A	2	20		9	OFFICE	104
COMMONS	101		2	20	3	B	4	20		9	OFFICE	102
EDF	113		1	15	5	C	6	20		7	WORK RM.	106
LOUNGE	108		7	20	7	A	8	20		5	GYM	175
EXTERIOR			4	20	9	B	10	20		1	SCOREBOARD	175
LOCKER RM.			8	20	11	C	12	20		4	GYM	175
LOCKER RM.			8	20	13	A	14	20		1	SCOREBOARD	175
UV-22	101			15	15	B	16	20		1	SCORES TABLE	175
UV-21	101			15	17	C	18	15			UV-11	108
UV-20	101			15	19	A	20	20		1	WHIRLPOOL	153
WRESTLING	229		7	20	21	B	22	20		1	WHIRLPOOL	154
FINISH RM.	141			20	23	C	24	20			PUMP	231
		X		20	25	A	26	20			AIR DRYER	231
SPARE				20	27	B	28	20			SPARE	
SPARE				20	29	C	30	20			SPARE	

PANELBOARD "J" LOCATION 138 EMD = 25.7 KVA
FLUSH MOUNTED, 1ϕ 3W, 120/240V. 225A MAINS

LOAD		LTG	REC	BKR	CKT	ϕ	CKT	BKR	LTG	REC		
SHOP REC.	138		2	20	1	A	2	20		1	SANDER	(1)
SHOP REC.	138		2	20	3	B	4	20		1	MITER BOX	(3)
BAND SAW	(4)		1	20	5	A	6	20		1	GRINDER	(2)
DRILL PRESS	(5)		1	20	7	B	8	20		1	RADIAL ARM	(7)
LATHE	(6)		1	20	9	A	10	20		2	REEL	(10)
EDF	138		1	15	11	B	12	20		2	REEL	(10)
SHOP REC.	138		1	20	13	A	14	20		2	REEL	(10)
SHOP REC.	138		2	20	15	B	16	20		2	REEL	(10)
OFFICE	139		5	20	17	A	18	20			SPARE	
SPARE				20	19	B	20	20			SPARE	
SPARE				20	21	A	22	20			SPARE	
SPACE					23	B	24				SPACE	
SPACE					25	A	26				SPACE	
SPACE					27	B	28				SPACE	
JOINTER				20	29	A	30	30			TABLE SAW	(8)
						B						
					33		34					
					35		36					
					37		38					
					39		40					
					41		42					

PANELBOARD "K" LOCATION 168 EMD = 76.8 KVA
FLUSH MOUNTED. 3ϕ, 4W, 480V. 225A MAINS

LOAD		LTG	REC	BKR	CKT	ϕ	CKT	BKR	LTG	REC		
						A						
DISPOSER	(7)			15	1	B	2	20			CONVECTION OVEN	(12)
						C						
						A						
KETTLE	(14)			40	3	B	4	20			CONVECTION OVEN	(12)
						C						
						A						
FRY PAN	(15)			30	5	B	6	15			DISPOSER	(28)a
						C						
						A						
DISPOSER	(35)			15	7	B	8	15			CUTTER/MIXER	(28)b
						C						
						A						
TANK HEATER	(36)			30	9	B	10	15			DISHWASHER	(36)a
						C						
						A						
SPARE				20	11	B	12	20			SPARE	
						C						
						A						
SPACE					13	B	14				SPACE	
						C						

PANELBOARD "L" LOCATION 168 EMD = 17.5 KVA
FLUSH MOUNTED. 3ϕ, 4W, 120/208V, 225A MAINS

LOAD	LTG	REC	BKR	CKT	ϕ	CKT	BKR	LTG	REC	
REFRIGERATOR			20	1	A	2	20			KETTLE & FRY PAN
FREEZER			20	3	B	4	20			STEAMER CONTROLS
MIXER			20	5	C	6	20			PROOF CABINET
REFRIGERATOR			20	7	A	8	20		2	WORKTABLE
HOT CABINET			30	9	B	10	20		2	WORKTABLE
REFRIGERATOR			20	11	C	12	20		1	WORKTABLE
SERVING COUNTER			20	13	A	14	20		2	WORKTABLE
SERVING COUNTER			20	15	B	16	20			MILK CABINET
DETERGENT DISPENSER			20	17	C	18	20		1	PORTABLE CART
PORTABLE CART		1	20	19	A	20	20		1	PORTABLE CART
PORTABLE CART		1	20	21	B	22	20		1	PORTABLE CART
RECEIVING		1	20	23	C	24	20		1	PORTABLE CART
TOILET		1	20	25	A	26	20		1	CONCESSION
OFFICE		6	20	27	B	28	20		1	CONCESSION
CONCESSIONS		2	20	29	C	30	20		1	CONCESSION
CONCESSIONS		2	20	31	A	32	20		1	CONCESSION
CONCESSIONS			20	33	B	34	30			FIRE PROTECTION SYSTEM
CONCESSIONS			20	35	C	36	15			ICE MACHINE
EDF			15	37	A	38	20	X		EXH. HOOD LIGHTS
SPARE			20	39	B	40	20			SPARE
SPARE			20	41	C	42	20			SPARE

(X) GROUND FAULT INTERRUPTING TYPE BREAKER

PANELBOARD "M" LOCATION 231 EMD = 65.5 KVA
SURFACE MOUNTED. 3ϕ, 4W, 277/480V. 225A MAINS

LOAD	LTG	REC	BKR	CKT	ϕ	CKT	BKR	LTG	REC	
					A					
MAKE-UP AIR HEATER			15	1	B	2	20			DUST COLLECTOR
RM. 138					C					
					A					
AIR COMPRESSOR 138			15	3	B	4	15			EF-2
					C					
					A					
AHU-1 175			15	5	B	6	15			AHU-2 175
					C					
					A					
AHU-3 175			15	7	B	8	15			AHU-4 175
					C					
					A					
AHU-5 229			15	9	B	10	20			EF-1, 3, 4 & 5
					C					
					A					
PUMP 231			20	11	B	12	15			AHU-6 231
					C					
					A					
PUMP 231			20	13	B	14	15			CONTROL AIR COMP.
STAND-BY					C					RM. 231

PANELBOARD "N" LOCATION 231 EMD = KVA
SURFACE MOUNTED. ϕ, W, V. MAINS

LOAD	LTG	REC	BKR	CKT	ϕ	CKT	BKR	LTG	REC	
				1	A	2				
				3	B	4				
				5	C	6				
				7	A	8				
				9	B	10				
				11	C	12				
				13	A	14				
				15	B	16				
				17	C	18				
				19		20				
				21		22				
				23		24				
				25		26				
				27		28				
				29		30				
				31		32				
				33		34				
				35		36				
				37		38				
				39		40				
				41		42				

PANELBOARD "P" LOCATION 168 EMD = 38.8 KVA.
FLUSH MOUNTED. 3ϕ 3W. 208V. 225A MAINS

LOAD	LTG	REC	BKR	CKT	ϕ	CKT	BKR	LTG	REC	
					A					
FRYER			30	1	B	2	15			CONDENSING UNIT
					C					(FREEZER)
					A					
FRYER			30	3	B	4	15			DEFROST HTR.
					C					(FREEZER)
					A					
STACK OVEN			30	5	B	6	15			CONDENSING UNIT
					C					(REFRIGERATOR)
					A					
MIXER			15	7	B	8	15			SERVING COUNTER
					C					
					A					
RANGE			30	9	B	10	15			SPARE
					C					
					A					
SPACE				11	B	12				SPACE
					C					

WILSON & COMPANY
SALINA KANSAS

ADDITION TO HIGH SCHOOL
UNIFIED SCHOOL DISTRICT #320
WAMEGO, KANSAS
PANELBOARD SCHEDULES

REVISION | DATE

DESIGN RLA
DRAWN WDB
DATE SEPT. 1978
FILE NO. 78-508
SHEET NO. E-13

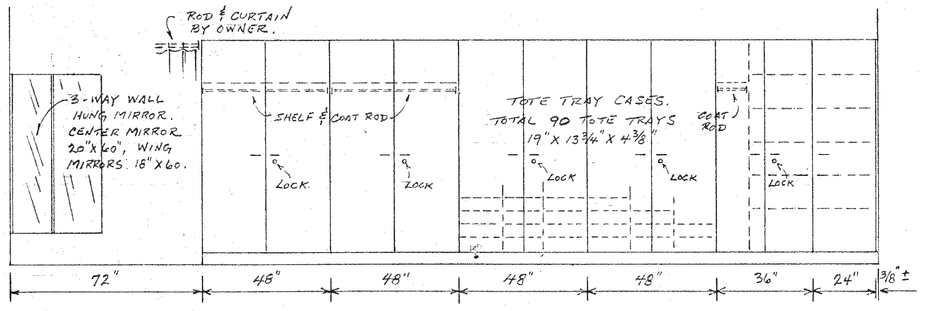

ELEV-A, RM. 116

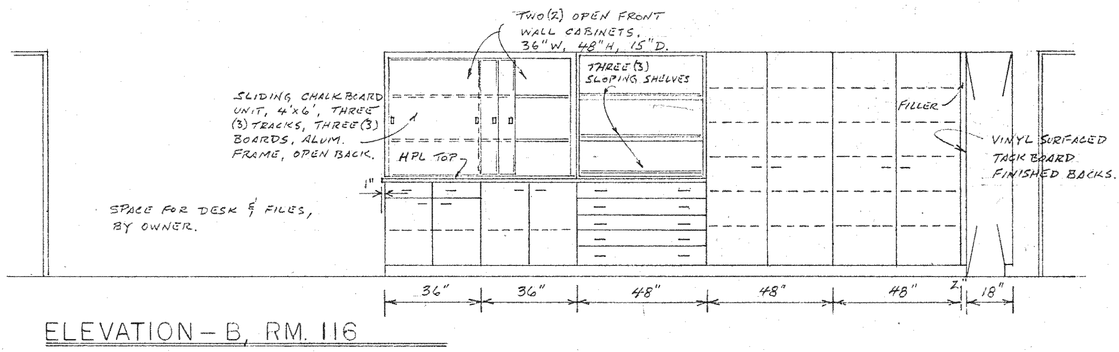

ELEVATION-B, RM. 116

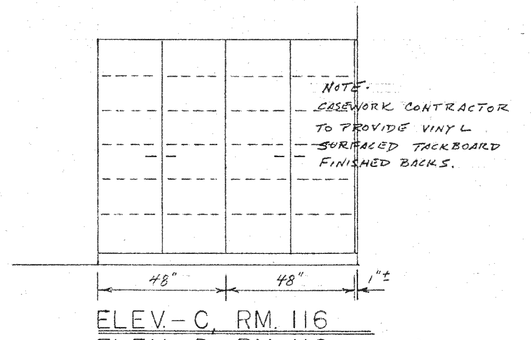

ELEV.-C, RM. 116

ELEV.-D, RM. 116 (REVERSED)

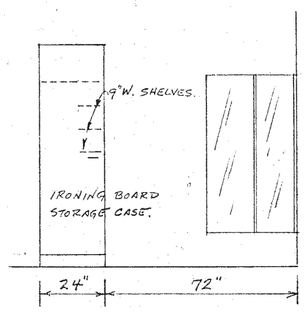

ELEV-E, RM. 116

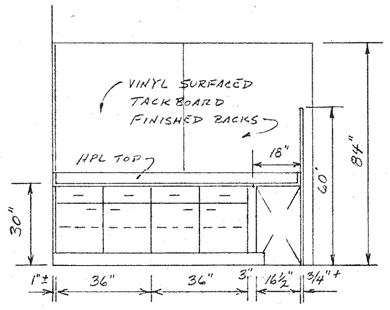

ELEV-A, RM. 117

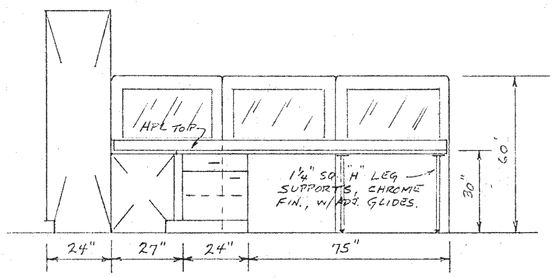

ELEV-B, RM. 117

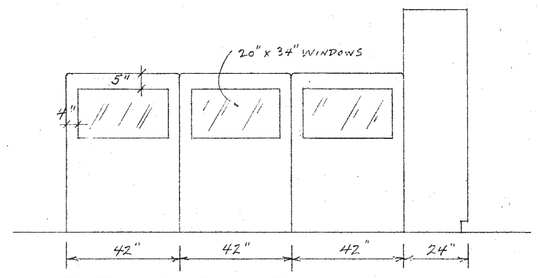

ELEV-C, RM. 117

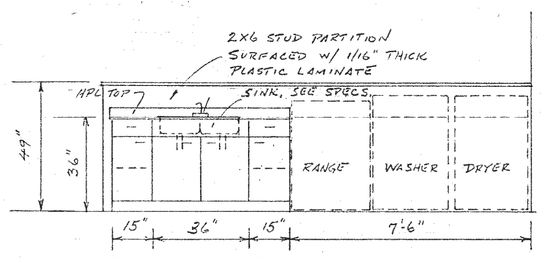

ELEV-D, RM. 117

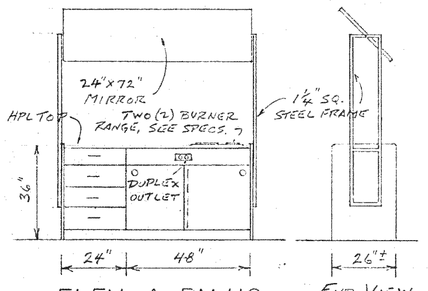

ELEV.-A, RM. 118

END VIEW

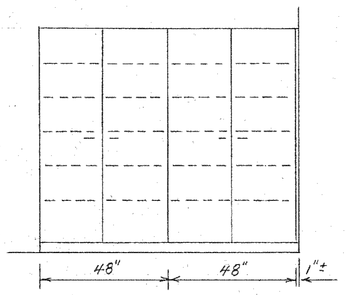

ELEV-B RM 118

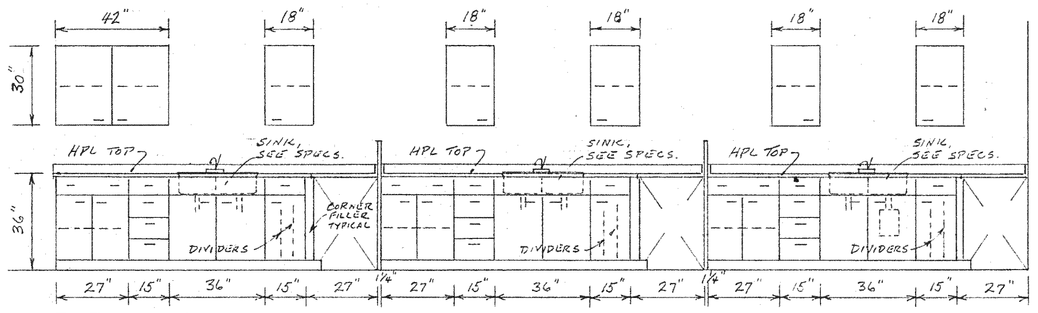

ELEV-C RM 118

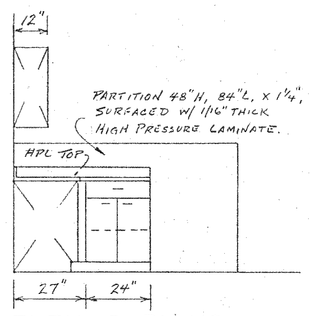

ELEV-D RM 118

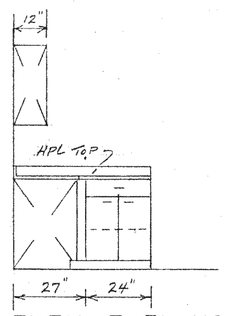

ELEV-E RM 118

As Shown or Reversed

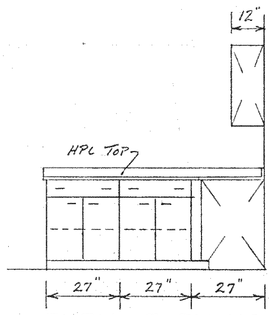

ELEV-F RM 118

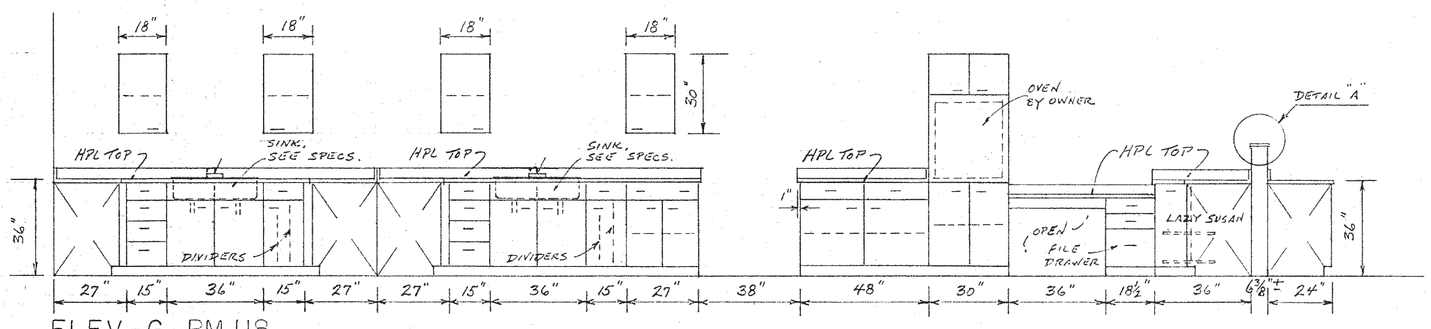

ELEV.-G, RM. 118

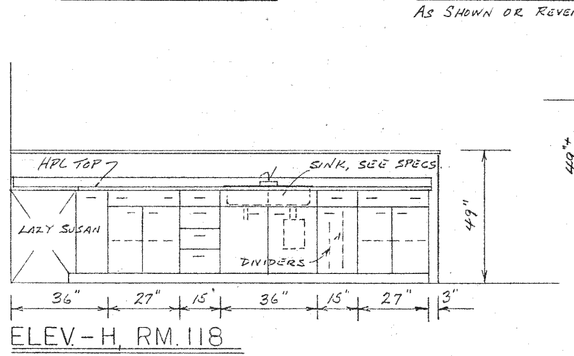

ELEV.-H, RM. 118

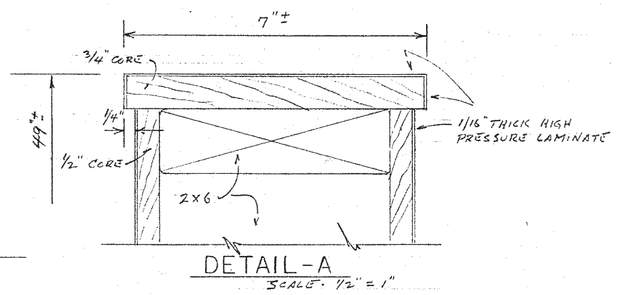

DETAIL-A

SCALE: 1½" = 1"

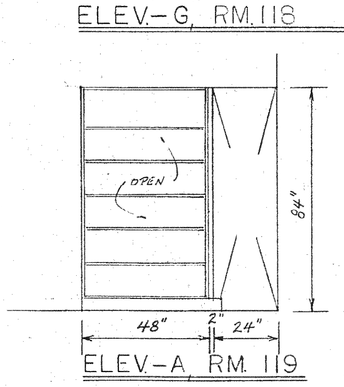

ELEV.-A, RM. 119

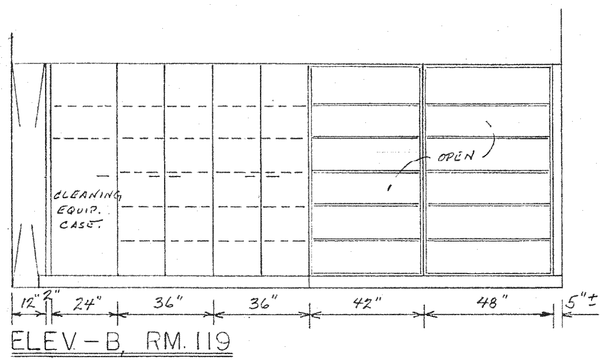

ELEV.-B, RM. 119

GROUP-"C", HOME ECONOMICS CASEWORK

FOR GENERAL INFORMATION ONLY - NOT IN CONTRACT

SCALE: 3/8"=1'-0"

REVISION	DATE	BY

WILSON & COMPANY
SALINA
KANSAS

ADDITION TO HIGH SCHOOL
UNIFIED SCHOOL DISTRICT #320
WAMEGO, KANSAS
FURNITURE AND EQUIPMENT

DESIGN	WEC
DRAWN	WEC
DATE	SEPT. 1979
FILE NO.	78-50B
SHEET NO.	F & E-4